S20
(Battery)

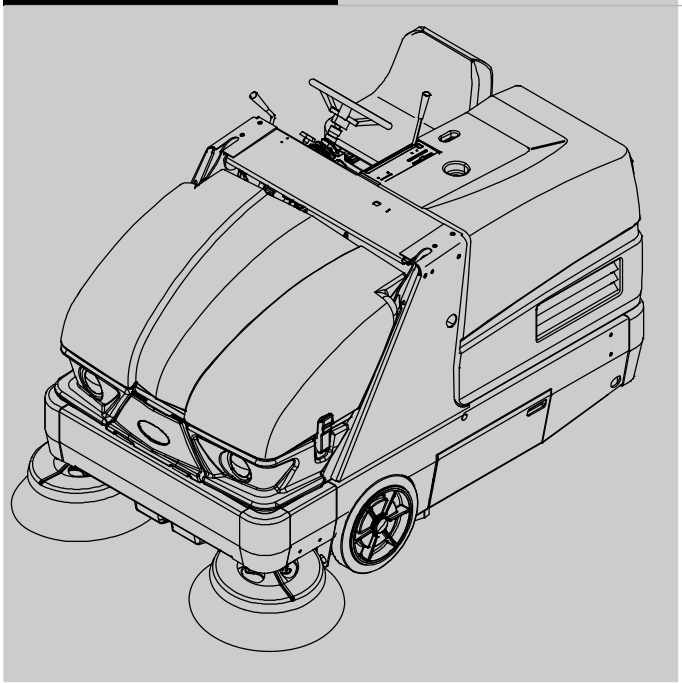

Sweeper
Parts Manual

For latest parts manual or other
Operator language manual, visit:

www.tennantco.com/manuals

9007230
Rev. 06 (1-2015)

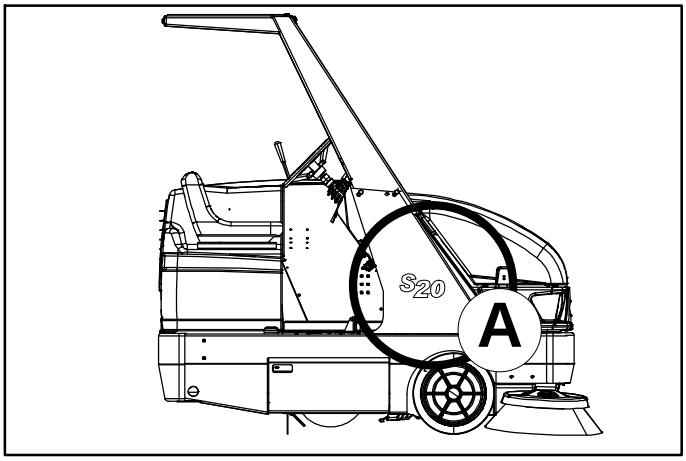

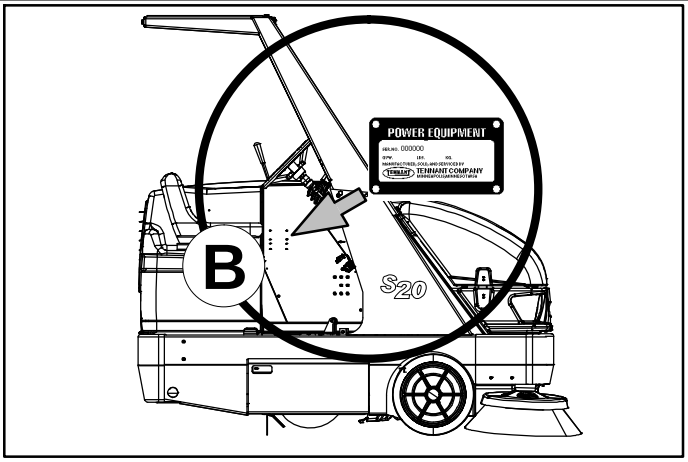

Ref	Part No.	Serial Number	Description	Qty.
1	82681	(000000–)	Bracket Wldt, Lpg Mount	1
▽ 2	63810	(000000–)	Latch Assy, Lpg Tank Mtg, W/Nut	4
▲ 3	51839	(000000–)	Nut Adjustable, Lpg Tank Mtg	2
4	49263	(000000–)	Tie, Cable	3
5	82556	(000000–001039)	Bracket, Vaporizer	1
6	54930	(000000–)	Vaporizer, LPG	1

D

C

EN

HOW TO ORDER PARTS − See diagram above

Only use TENNANT Company supplied or equivalent parts. Parts and supplies may be ordered online, by phone, by fax or by mail.

Follow the steps below to ensure prompt delivery.

1. **(A)** Identify the machine model.
2. **(B)** Identify the machine serial number from the data plate.
3. **(C)** Ensure the proper serial number is used from the parts list.
4. Identify the part number and quantity. Do not order by page or reference numbers.
5. Provide your name, company name, customer ID number, billing and shipping address, phone number and purchase order number.
6. Provide detail shipping instructions.

(D) ▽ − identifies an assembly
▲ − identifies parts included in assembly

Please fill out at time of installation for future reference.

Model No. − _____

Serial No. − _____

Machine Options − _____

Sales Rep. − _____

Sales Rep. phone no. − _____

Customer ID Number − _____

Installation Date − _____

Tennant N.V.
Industrielaan 6 5405 AB
P.O. Box 6 5400 AA Uden−The Netherlands
europe@tennantco.com
www.tennantco.com

Specifications and parts are subject to change without notice.

Original Instructions, copyright © 2010, 2011, 2012, 2014, 2015 TENNANT Company, Printed in The Netherlands

BG

КАК ДА ПОРЪЧВАМЕ ЧАСТИ - Вижте схемата по-горе

Използвайте само части, доставени от TENNANT или техни еквиваленти. Частите и доставките могат да се поръчат онлайн, по телефон, факс или по пощата.

Следвайте долупосочените стъпки, за да си осигурите бърза и точна доставка.

1. **(A)** Посочете модела на машината.
2. **(B)** Посочете серийния номер на машината от табелката с техническите данни.
3. **(C)** Уверете се, че сте използвали точния сериен номер от списъка с части.
4. Посочва номера на частта и количеството. Не поръчвайте части според страницата или референтните номера.
5. Посочете своето име, наименованието на фирмата, клиентския номер, адреса за получаване на сметката и доставката, тел.номер и номера на поръчката.
6. Посочете подробни инструкции за доставката.

(D) ▽ – посочва начин на монтаж
▲ – посочва частите, включени в монтажа

Моля, попълнете по време на монтажа за бъдеща справка.

Модел Э – _____
Сериен Э – _____
Опции на машината – _____
Търговски представител – _____
Тел. Э на търг. представител – _____
Клиентски Э – _____
Дата на монтаж – _____

CN

如何订购部件 – 参见下表

仅使用 TENNANT 公司提供的或同等部件。部件和供应可以在线订购，通过电话、传真或邮件订购。
请遵循下面的步骤确保及时交付。

1. **(A)** 确定机器型号。
2. **(B)** 从数据标签确定机器序列号。
3. **(C)** 确保使用部件列表中的正确序列号。
4. 确定部件号和数量。
   不要按页面或参考编号订购。
5. 提供您的姓名、公司名称、客户 ID 号、付帐和送货地址、电话号码和采购单编号。
6. 提供详细的送货说明。

(D) ▽ – 确定组件
▲ – 确定组件中包含的组件

请在安装时填写供未来参考。

型号 – _____
序列号 – _____
机器选项 – _____
销售代表- _____
销售代表电话号码 – _____
客户 ID 编号 – _____
安装日期 – _____

CZ

OBJEDNÁVÁNÍ DÍLŮ - Viz schéma výše.

Používejte pouze díly dodané společností TENNANT Company nebo jim odpovídající. Díly a materiál lze objednat online, telefonem, faxem nebo poštou.

Aby bylo zajištěno rychlé dodání, postupujte podle kroků uvedených níže.

1. **(A)** Zjistěte model stroje.
2. **(B)** Zjistěte sériové číslo stroje z výrobního štítku.
3. **(C)** Použijte správné sériové číslo ze seznamu dílů.
4. Určete číslo a množství dílů.
   Neobjednávejte podle stran nebo referenčních čísel.
5. Uveďte jméno, název společnosti, číslo ID zákazníka, fakturační a dodací adresu, telefonní číslo a číslo objednávky.
6. Uveďte podrobné pokyny pro dodání.

(D) ▽ – označuje sestavu
▲ – označuje díly v sestavě

Vyplňte během sestavování pro budoucí potřebu.

Číslo modelu – _____
Sériové číslo – _____
Doplňky zařízení – _____
Obchodní zástupce – _____
Tel. č. obchodního zástupce – _____
Číslo ID zákazníka – _____
Datum instalace – _____

DE

BESTELLEN VON ERSATZTEILEN – Siehe oben stehendes Diagramm.

Verwenden Sie nur von TENNANT gelieferte oder gleichwertige Ersatzteile. Ersatz– und Verschleißteile können online, telefonisch, per Fax oder per E–Mail bestellt werden.

Befolgen Sie für eine umgehende Lieferung die folgenden Schritte.

1. **(A)** Geben Sie das Modell der Maschine an.
2. **(B)** Geben Sie die Seriennummer der Maschine an (auf dem Datenaufkleber).
3. **(C)** Achten Sie darauf, dass die richtigen Seriennummer aus der Ersatzteilliste verwendet wird.
4. Geben Sie die Ersatzteilnummer und die Menge an.
   Bestellen Sie nicht nach Seitenzahl oder Referenznummern.
5. Geben Sie Ihren Namen, den Firmennamen, die Kundennummer, die Rechnungs– und Lieferadresse, die Telefonnummer und die Einkaufsauftragsnummer an.
6. Erteilen Sie genaue Versandanweisungen.

(D) ▽ – steht für eine Einheit
▲ – steht für Einzelteile einer Einheit

Bitte bei der Inbetriebnahme als Referenzangabe ausfüllen.

Modellnr. – _____
Seriennr. – _____
Maschinenoptionen – _____
Verkäufer – _____
Telefonnummer des Verkäufers – _____
Kundennummer – _____
Installationsdatum – _____

DK

BESTILLING AF RESERVEDELE − Se ovenstående tabel.

Brug kun reservedele, der er fremstillet af TENNANT, eller dele af tilsvarende kvalitet. Reservedele og tilbehør kan bestilles online, pr. telefon, pr. fax eller pr. brev.

Følg nedenstående trin for at sikre hurtig levering.

1. **(A)** Identificér maskinmodellen.
2. **(B)** Identificér maskinens serienummer på datamærkaten.
3. **(C)** Kontrollér, at det rigtige serienummer bruges i reservedelslisten.
4. Identificér reservedelsnummeret og antallet. Bestil ikke efter side− eller referencenumre.
5. Angiv dit navn, firmanavn, kunde−id−nummer, faktureringsadresse og leveringsadresse, telefonnummer og indkøbsordrenummer.
6. Angiv detaljerede instruktioner til forsendelse.

(D) ▽ − identificerer en enhed
▲ − identificerer reservedele i en enhed

Udfyld venligst på installationstidspunktet til fremtidig brug.

Modelnr. − _____
Serienr. − _____
Maskinekstraudstyr − _____
Salgskonsulent. − _____
Salgskonsulentens tlf. − _____
Kunde−id−nr. − _____
Installationsdato − _____

EE

KUIDAS VARUOSI TELLIDA – vaadake alltoodud joonist

Kasutage ainult TENNANT Company poolt tarnitud või samaväärseid varuosi. Varuosi ja tarvikuid saab tellida Interneti, telefoni, faksi või posti teel.

Kiire kohaletoimetamise tagamiseks järgige alltoodud juhiseid.

1. **(A)** Märkige masina mudel.
2. **(B)** Märkige andmesildil olev masina seerianumber.
3. **(C)** Veenduge, et olete valinud varuosade loendist õige seerianumbri.
4. Märkige varuosa number ja kogus. Ärge tellige lehekülje– või viitenumbri alusel.
5. Märkige oma nimi, ettevõtte nimi, kliendinumber, arveldus– ja saatmisaadress, telefoninumber ja ostutellimuse number.
6. Lisage täpsed saatmisjuhised.

(D) ∇ – tähistab komplekti
▲ – tähistab komplektis olevaid osii

Palun täitke paigaldamise ajal edaspidiseks viitamiseks.

Mudeli number − _____
Seerianumber − _____
Masina lisavarustus − _____
Müügiesindus – _____
Müügiesinduse telefoninumber – _____
Kliendinumber – _____
Paigaldamise kuupäev – _____

ES

CÓMO SOLICITAR PIEZAS − Consulte el diagrama anterior.

Utilice sólo las piezas suministradas por TENNANT Company o piezas equivalentes. Puede solicitar las piezas a través de internet, por teléfono, por fax o por correo.

Siga los siguientes pasos para que la entrega sea rápida.

1. **(A)** Indique el modelo de máquina.
2. **(B)** Indique el número de serie de la etiqueta de datos.
3. **(C)** Asegúrese de que indica el número de serie correcto de la lista de piezas.
4. Indique la cantidad y el número de la pieza. No realice el pedidoindicando el número de página o el de referencia.
5. Incluya su nombre, el nombre de la empresa, el ID de cliente, las direcciones de envío y facturación, el número de teléfono y el número del pedido de compra.
6. Facilite instrucciones de envío.

(D) ▽ − identifica un conjunto
▲ − identifica piezas de un conjunto

Rellene estos datos cuando realice la instalación para utilizarlos como referencia en el futuro.

Nº modelo − _____
Nº serie − _____
Opciones de la máquina − _____
Vendedor − _____
Nº teléfono vendedor − _____
Nº cliente − _____
Fecha de instalación − _____

FI

KUINKA VARAOSIA TILATAAN − katso kuvaa yllä.

Käytä ainoastaan TENNANTIN toimittamia tai niitä vastaavia varaosia. Voit tilata varaosia ja tarvikkeita internetistä, puhelimitse, faksilla tai sähköpostilla.

Noudata seuraavia ohjeita täsmällisen toimituksen varmistamiseksi.

1. **(A)** Katso koneen malli.
2. **(B)** IKatso koneen sarjanumero sen tunnustarrasta.
3. **(C)** Varmista, että osaluettelosta, että käytät oikeaa sarjanumeroa.
4. Katso osanumero ja kappalemäärä. Älä tilaa ilmoittamalla sivu− tai viitenumeroita.
5. Ilmoita nimesi, yrityksesi nimi, asiakasnumero, laskutus− ja toimitusosoite, puhelinnumero ja ostotilauksen numero.
6. Ilmoita yksityiskohtaiset toimitusosoitteet.

(D) ▽ − tarkoittaa kokoonpanoa
▲ − tarkoittaa kokoonpanoon sisältyviä osia

Ole hyvä ja täytä ottaessasi koneen käyttöön myöhempiä tarpeita varten.

Mallinumero − _____
Sarjanumero − _____
Koneen lisävarusteet − _____
Myyntiedustaja − _____
Myyntiedustajan puhelinnumero − _____
Asiakasnumero − _____
Asennuspäivä − _____

FR

COMMENT COMMANDER DES PIÈCES DÉTACHÉES − Voir le schéma ci−dessus.

Utilisez uniquement des pièces fournies par la société TENNANT ou équivalentes. Les pièces et fournitures peuvent être commandées en ligne, par téléphone, fax, ou par courrier.

Suivez les étapes ci−dessous pour assurer une livraison rapide.

1. **(A)** Identifiez le modèle de la machine.
2. **(B)** Identifiez le numéro de série de la machine, à partir de l'étiquette signalétique.
3. **(C)** Assurez−vous que le numéro de série correct est utilisé à partir de la liste de pièces détachées.
4. Identifiez le numéro de pièce et la quantité. Ne commandez pas par page ou numéros de référence.
5. Fournissez votre nom, le nom de votre société, votre numéro d'identification de client, l'adresse de facturation et d'expédition, le numéro de téléphone et le numéro du bon de commande.
6. Fournissez des instructions d'expédition détaillées.

(D) ▽ − identifie un assemblage
▲ − identifie les pièces composant l'assemblage

A remplir au moment de l'installation à titre de référence.

Nº du modèle − _____
Nº de série − _____
Options de la machine − _____
Agent commercial − _____
Nº tél. de l'agent commercial − _____
Numéro d'identification client − _____
Date d'installation − _____

GR

ΤΡΟΠΟΣ ΠΑΡΑΓΓΕΛΙΑΣ ΑΝΤΑΛΛΑΚΤΙΚΩΝ - Βλ. παραπάνω διάγραμμα.

Χρησιμοποιήστε μόνο ανταλλακτικά παρεχόμενα από την TENNANT Company ή ισοδύναμα. Τα ανταλλακτικά και αναλώσιμα μπορούν να παραγγελθούν online, τηλεφωνικά, με φαξ ή ταχυδρομικά.

Ακολουθήστε τα παρακάτω βήματα για να εξασφαλίσετε την έγκαιρη αποστολή τους.

1. **(A)** Βρείτε το μοντέλο μηχανήματος.
2. **(B)** Βρείτε τον αριθμό σειράς του μηχανήματος από την ετικέτα στοιχείων.
3. **(C)** Βεβαιωθείτε ότι χρησιμοποιείται ο σωστός αριθμός σειράς από τον κατάλογο ανταλλακτικών.
4. Βρείτε κωδικό ανταλλακτικού και ποσότητα. Μην παραγγέλνετε βάσει σελίδας ή αριθμών αναφοράς.
5. Δώστε το όνομα σας, όνομα εταιρείας, ID (κωδικό) πελάτη, διεύθυνση τιμολόγησης και αποστολής, αριθμό τηλεφώνου και αριθμό εντολής προμήθειας.
6. Δώστε λεπτομερείς πληροφορίες αποστολής.

(D) ▽ − υποδηλώνει υποσύστημα
▲ − υποδηλώνει τα μέρη που περιλαμβάνονται στο υποσύστημα

Παρακαλούμε συμπληρώστε κατά την ώρα της εγκατάστασης για μελλοντική αναφορά.

Αρ. Μοντέλου − _____
Αρ. σειράς − _____
Επιλογές Μηχανήματος − _____
Εκπ. πωλήσεων − _____
Τηλ. εκπροσώπου πωλήσεων − _____
Αριθμός πελάτη − _____
Ημερομηνία εγκατάστασης − _____

HU

HOGYAN RENDELJÜNK ALKATRÉSZEKET - Lásd: fenti diagramm.

Kizárólag TENNANT vagy azzal egyenértékű cserealkatrészeket használjon. Az alkatrészeket és anyagokat meg lehet rendelni az Interneten keresztül, vagy telefonon, faxon és e-mailben.

A pontos szállítás érdekében kövesse az alábbi lépéseket.

1. **(A)** Adja meg a gép típusát.
2. **(B)** Az adatcímke alapján adja meg a gép gyártási számát.
3. **(C)** Ügyeljen arra, hogy a megfelelő gyártási számot válassza ki az alkatrészlistáról.
4. Adja meg a rendelési számot és a mennyiséget. A rendeléshez ne az oldalszámot vagy a hivatkozási számot használja.
5. Adja meg a nevét, a cége nevét, az ügyfélazonosító számát, a számlázási és szállítási címét, a telefonszámát és a rendelési számot.
6. Adjon részletes szállítási utasításokat.

(D) ▽ − a jel csomagra utal
▲ − a jel a csomagban található alkatrészekre utal

A későbbi visszakeresések érdekében kérjük, hogy a rovatokat az első üzembehelyezéskor töltse ki.

Típusszám − _____
Gyártási szám. − _____
A gép felszereltsége − _____
Kereskedelmi képviselő − _____
Kereskedelmi képviselő telefonszáma − _____
Ügyfél azonosító száma − _____
Üzembehelyezés dátuma − _____

IT

COME ORDINARE LE PARTI − Vedere schema precedente.

Utilizzare solo ricambi forniti da TENNANT o equivalenti. Ricambi e forniture possono essere ordinati online, per telefono, via fax o per posta elettronica.

Per ottenere una consegna rapida, seguire i passaggi indicati di seguito.

1. **(A)** Identificare il modello della macchina.
2. **(B)** Identificare il numero di serie della macchina dall'etichetta dei dati.
3. **(C)** Utilizzare il numero di serie corretto presente nell'elenco delle parti di ricambio.
4. Identificare numero di parte e quantità. Non ordinare per numero di pagina o di riferimento.
5. Fornire nome del contatto, nome della società, numero di ID cliente, indirizzo di fatturazione e di spedizione, numero di telefono e numero di ordine di acquisto.
6. Fornire istruzioni dettagliate per la spedizione.

(D) ▽ − identifica un gruppo
▲ − identifica parti comprese in un gruppo

Compilare il modulo al momento dell'installazione per poterlo consultare in futuro in caso di necessità.

N. Modello − _____
N. Serie − _____
Opzioni della macchina − _____
Venditore − _____
Tel. venditore − _____
Numero ID cliente − _____
Data di installazione − _____

JP

パーツの発注方法 ?上記の図を参照してください

TENNANT社製のパーツまたは同等品のみをお使いください。
パーツやサプライ品のご注文は、オンライン、電話、FAX、または手紙でお願いいたします。
確実にお届けできるように、以下の情報お知らせください。

1. **(A)** 製品のモデル名をお知らせください。
2. **(B)** 製品のデータラベルに印刷されているシリアル番号をお知らせください。
3. **(C)** パーツリストを参照して、シリアル番号が正しいかご確認ください。
4. パーツ番号と数量をお知らせください。マニュアル/カタログのページ番号や参照番号でのご注文はご遠慮ください。
5. お客様のお名前、会社名、顧客ID番号、請求/発送先住所、電話番号、注文書番号をお知らせください。
6. 発送に関するご希望があれば、明記してください。

(D) ▽ – アセンブリを示します
▲ – アセンブリに含まれるパーツを示します

後日確認できるように、設置時に記入してください。

モデルNo. –
シリアルNo. –
製品のオプション–
販売代理店 –
販売代理店の電話番号 –
顧客ID番号 –
設置日 –

LT

KAIP UŽSISAKYTI DALIS — žr. diagramà viršuje

Naudokite tik "Tennant" kompanijos tiekiamas arba lygiavertes joms dalis. Dalis galite užsisakyti internetu, telefonu, faksu bei elektroniniu paštu.

Kad užsakymas būtų greitai įvykdytas, laikykitės išvardytų taisyklių.

1. **(A)** Nurodykite mašinos modelį.
2. **(B)** Norodykite mašinos serijos numerį, kurį rasite ant duomenų žymės.
3. **(C)** Įsitikinkite, kad nurodomas tikslus serijos numeris iš dalių sàrašo.
4. Nurodykite dalies numerį ir reikiamà kiekį. Neužsakinėkite pagal puslapius ar nuorodos numerius.
5. Nurodykite savo vardà, kompanijos pavadinimà, kliento ID numerį, sàskaitos išrašymo ir vežimo adresà, telefono numerį ir pirkimo užsakymo numerį.
6. Nurodykite išsamias gabenimo instrukcijas.

(D) ▽ — žymi sistemà
▲ — nurodo sistemos dalis

Prašome užpildyti montavimo metu, siekiant gauti informacijà ateityje.

Modelio nr. —
Serijos nr. —
Mašinos parinktys —
Prekybos atstovas —
Komivojažieriaus tel. nr. —
Pirkėjo ID numeris —
Sumontavimo data —

LV

KĀ PASŪTĪT REZERVES DETAĻAS — Skat. diagrammu iepriekš

izmantojiet tikai TENNANT Company piegādātās vai tām līdzvērtīgas rezerves detaļas. Daļas un piegādi var pasūtīt internetā, pa tālruni, pa faksu vai pastu.

Lai nodrošinātu savlaicīgu piegādi, sekojiet zemāk aprakstītajiem soļiem.

1. **(A)** Nosakiet mašīnas modeli.
2. **(B)** Nosakiet mašīnas sērijas numuru uz tehnisko datu uzlīmes.
3. **(C)** Pārliecinieties, ka tiek uzrakstīts attiecīgais sērijas numurs no detaļu saraksta.
4. Nosakiet detaļas numuru un skaitu. Veicot pasūtījumus neatsaucieties uz lappušu vai norādes numuriem.
5. Uzrakstiet savu vārdu, uzņēmuma nosaukumi, klienta identitātes numuru, adresi rēķina piesūtīšanai un piegādei un pirkuma pasūtījuma numuru.
6. Sniedziet detalizētu informāciju par piegādi.

(D) ▽ — nosaka ierīci i
▲ — nosaka detaļas, kas ir komplektā ar ierīci

Veicot uzstādīšanu, lūdzam pierakstīst attiecīgo informāciju izmantošanai turpmāk.

Modeļa Nr. —
Sērijas Nr. —
Iekārtas papildaprīkojums—
Pārdošanas pārst. —
Pārdošanas pārst. tālr. Nr. —
Klienta identitātes numuru—
Uzstādīšanas datums—

NL

HOE ONDERDELEN TE BESTELLEN – Zie schema hierboven.

Gebruik alleen onderdelen die door TENNANT Company zijn geleverd of soortgelijke onderdelen. Onderdelen en voorraden kunnen online, per telefoon, fax of schriftelijk besteld worden.

Volg de stappen hieronder om een juiste levering te garanderen.

1. **(A)** Bepaal het machinemodel.
2. **(B)** Lees het serienummer van de machine af van het gegevenslabel.
3. **(C)** Zorg dat het juiste serienummer wordt gebruikt uit de onderdelenlijst.
4. Bepaal het artikelnummer en het aantal. Bestel niet aan de hand van pagina's of referentienummers
5. Geef uw naam, bedrijfsnaam, klantnummer, factuur– en leveringsadres, telefoonnummer en bestelnummer op.
6. Geef gedetailleerde leveringsinstructies op.

(D) ▽ – geeft een eenheid aan
▲ – geeft de onderdelen van de eenheid aan

Vul tijdens installatie de onderstaande gegevens in voor eventueel toekomstig gebruik.

Modelnr. –
Serienr. –
Machine–opties –
Verkoopvert. –
Telnr. verkoopvert. –
Klantnummer –
Installatiedatum –

NO

HVORDAN BESTILLE DELER − Se diagram over.

Bruk kun deler levert av TENNANT Company eller ekvivalente deler. Deler og forsyninger kan bestilles online, per telefon, per faks eller per post.

Følg trinnene under for å sikre rask levering.

1. **(A)** Angi maskinmodellen.
2. **(B)** Angi maskinens serienummer fra typeskiltet.
3. **(C)** Forsikre deg om at korrekt serienummer brukes fra delelisten.
4. Angi delenummer og antall. Bestill ikke ut fra side− eller referansenumre.
5. Angi ditt navn, firmanavn, kunde−ID−nummer, fakturerings− og forsendelsesadresse, telefonnummer og innkjøpsordrenummer.
6. Angi detaljerte forsendelsesinstruksjoner.

(D) ▽ − angir en delegruppe
▲ − angir deler inkludert i en delegruppe

Fyll ut ved installasjonstidspunkt for fremtidig bruk.

Modellnr. − _____
Serienr.. − _____
Maskinens tillegg − _____
Salgsrep. − _____
Salgsrep. telefonnr. − _____
Kunde−ID−nummer − _____
Installasjonsdato − _____

PL

JAK ZAMAWIAĆ CZĘŚCI - patrz schemat powyżej.

Należy używać wyłącznie części dostarczanych przez firmę TENNANT Company lub równoważnych. Części i dostawy mogą być zamawiane online, przez telefon, faksem lub pocztą.

Aby zapewnić szybką dostawę, należy przestrzegać następujących wskazówek.

1. **(A)** Określić model maszyny.
2. **(B)** Określić numer seryjny maszyny znajdujący się na tabliczce znamionowej.
3. **(C)** Odszukać ten numer seryjny w wykazie części.
4. Określić numer części i ilość. Nie zamawiać na podstawie numeru strony lub liczby porządkowej wykazu.
5. Podać swoje nazwisko, nazwę firmy, numer identyfikacyjny klienta, adres dostawy i dostarczenia rachunku, numer telefonu i numer zamówienia zakupu.
6. Podać dokładne instrukcje dotyczące dostawy.

(D) ▽ − oznacza zespół
▲ − oznacza część w zespole

Prosimy wpisać datę instalacji do późniejszego wykorzystania.

Nr modelu− _____
Nr seryjny − _____
Opcje maszyny − _____
Przedst. sprzedaży − _____
Nr tel. przedst. sprzed. − _____
Nr ident. klienta − _____
Data instalacji − _____

PT G

COMO ENCOMENDAR PEÇAS − Consulte o diagrama acima.

Utilize apenas peças fornecidas pela TENNANT Company ou equivalentes. As peças e consumíveis podem ser encomendados online, por telefone, fax ou correio.

Siga os passos abaixo para garantir uma entrega rápida.

1. **(A)** Identifique o modelo da máquina.
2. **(B)** Identifique o número de série da máquina que se encontra na etiqueta de dados.
3. **(C)** Certifique−se de que usa o número de série correcto da lista de peças.
4. Identifique o número de produto e a quantidade. Não encomende através de números de página ou de referência.
5. Forneça o seu nome, o nome da empresa, o número de ID do cliente, os endereços de facturação e entrega, o número de telefone e o número da nota de encomenda.
6. Forneça instruções de entrega detalhadas.

(D) ▽ − identifica uma unidade
▲ − identifica peças incluídas numa unidade

Preencha na altura da instalação para futura referência.

Modelo nº − _____
Nº de série − _____
Opções da máquina − _____
Vendedor − _____
Telefone do vendedor − _____
Número de ID do cliente − _____
Data de instalação − _____

RU

КАК ЗАКАЗАТЬ ЗАПЧАСТИ - См. схему ниже.

Используйте только запчасти, поставляемые компанией TENNANT или их аналоги. Запасные части и расходные материалы можно заказать в режиме онлайн, телефоном, факсом или электронной почтой.

Для своевременной доставки следуйте описанным ниже инструкциям.

1. **(A)** Укажите модель машины.
2. **(B)** Укажите серийный номер машины, обозначенный на табличке технических данных.
3. **(C)** Удостоверьтесь, что надлежащий серийный номер перечислен в списке запчастей.
4. Укажите номер детали и нужное количество. Не используйте номера страниц или ссылок.
5. Укажите свое имя, название компании, идентификационный номер покупателя, расчетный адрес и адрес доставки, телефонный номер и номер заказа на покупку.
6. Укажите подробные сведения о доставке.

(D) ▽ − означает узел
▲ − обозначает деталь узла

Во время установки заполните, пожалуйста, эти сведения для того, чтобы ссылаться в дальнейшем.

Модель Э − _____
Серийный Э − _____
Опции машины − _____
Торговый представитель − _____
Телефон торгового представителя − _____
Идент. номер покупателя − _____
Дата установки − _____

SE

BESTÄLLNING AV RESERVDELAR − Se ovanstående schema.

Använd endast delar från Tennant Company eller likvärdiga. Delar och material kan beställas online, telefoniskt, per fax eller post.

Följ nedanstående steg för en snabb leverans.

1. **(A)** Identifiera maskinens modell.
2. **(B)** Identifiera maskinens serienummer på typskylten.
3. **(C)** Kontrollera att rätt serienummer används från dellistan.
4. Identifiera artikelnumret och mängden. Beställ inte med hjälp av sido− eller referensnummer.
5. Uppge ditt namn, företagets namn, kundens ID−nummer, faktura− och leveransadress, telefonnummer och ordernumret vid inköp.
6. Ge detaljerade transportanvisningar.

(D) ▽ − identifierar en modul
▲ − identifierar delar som ingår i en modul

Fyll i vid installation och spar för framtida bruk.

Modellnr. − _____
Serienr. − _____
Tilvalsutrustning − _____
Försäljare − _____
Försäljarens tel.nr. − _____
Kundnummer − _____
Installationsdatum − _____

SK

POSTUP PRI OBJEDNÁVANÍ ČASTÍ - Pozri vyššie uvedený diagram.

Využívajte výhradne dielce dodané spoločnosťou TENNANT, alebo ich ekvivalenty. Dielce a položky je možné objednať online, telefonicky, faxom, alebo poštou.

Na zabezpečenie promptného doručenia sa riaďte nasledovnými krokmi.

1. **(A)** Identifikujte model stroja.
2. **(B)** Z etikety s údajmi identifikujte sériové číslo stroja.
3. **(C)** Ubezpečte sa, že ste zadali správne sériové číslo zo zoznamu dielcov.
4. Identifikujte číslo dielu a množstvo. Neobjednávajte pomocou čísel strán, alebo referenčných čísel.
5. Zadajte Vaše meno, meno spoločnosti, ID číslo zákazníka, fakturačnú a prepravnú adresu, telefónne číslo a objednávacie číslo dielu.
6. Uveďte podrobné prepravné pokyny.

(D) ▽ − identifikuje sadu
▲ − identifikuje časti sady

Vyplňte prosím pri inštalácii pre prípad potreby v budúcnosti.

č. modelu − _____
Sériové č. − _____
Zvláštne príslušenstvo stroja − _____
Obchodné zastúpenie − _____
Obch. zastúpenie tel. č. − _____
ID č. zákazníka − _____
Dátum inštalácie − _____

SL

NAROČANJE NADOMESTNIH DELOV - glejte zgornjo sliko.

Uporabljajte samo originalne nadomestne dele Tennant ali enakovredne dele. Dele in potrošni material lahko naročite prek spleta, po telefonu, faksu ali pošti.

Za zagotovitev čimbolj hitre dostave sledite spodnjim navodilom.

1. **(A)** Ugotovite model stroja.
2. **(B)** Na ploščici s podatki poiščite serijsko številko stroja.
3. **(C)** Poskrbite, da na seznamu nadomestnih delov poiščete pravilno serijsko številko.
4. Poiščite številko dela in potrebno količino. Pri naročilih ne navajajte strani ali referenčne številke.
5. Navedite svoje ime, ime podjetja, ID številko stranke, naslova za dostavo in izdajo računa, telefonsko številkoin številko naročila.
6. Navedite podrobna navodila za dostavo.

(D) ▽ − označuje sklop
▲ − označuje dele sklopa

Prosimo, da ob vgradnji izpolnite te podatke, da vam bodo v prihodnje na voljo.

Št. modela − _____
Serijska številka − _____
Dodatna oprema stroja − _____
Prodajni predstavnik − _____
Telefonska št. prodajnega predstavnika − _____
Številka stranke − _____
Datum vgradnje − _____

TR

PARÇALARIN SİPARİŞ EDİLMESİ - Yukarıdaki şemaya bakın.

Yalnızca TENNANT Company'den sağlanan veya eşdeğerde parçalar kullanın. Parça veya sarf malzemeleri çevrimiçi olarak, telefonla, faksla veya postayla sipariş edilebilir.

Zamanında teslimatı sağlamak için aşağıdaki adımları izleyin.

1. **(A)** Makine modelini belirtin.
2. **(B)** Veri etiketinden makine seri numarasını belirtin.
3. **(C)** Parça listesinden uygun seri numarasının kullanıldığından emin olun.
4. Parça numarasını ve miktarını belirtin. Sayfa veya referans numaralarını kullanarak sipariş vermeyin.
5. Adınızı, şirketinizin adını, müşteri kimlik numaranızı, faturalama ve sevkıyat adreslerini, telefon numarasını ve satın alma siparişi numarasını belirtin.
6. Ayrıntılı sevkıyat talimatlarını belirtin.

(D) ▽ − bir tertibatı belirtir
▲ − tertibattaki parçaları belirtir

İleri tarihlerde başvurmak için lütfen kurulum sırasında doldurun.

Model No. - _____
Seri No. - _____
Makine Seçenekleri - _____
Satış Temsilcisi - _____
Satış Temsilcisi telefon no. - _____
Müşteri Kimlik Numarası - _____
Kurulum Tarihi - _____

E

General Recommended Maintenance Items

	Ref.	Part No.	Serial Number	Description	Qty.
▽		9006388	(0000−)	Maint Kit, 400hr [S20 Ele]	1
▲		360686	(0000−)	Belt, V, 33.5l [3v]	1
▲		03670	(0000−)	Belt, V, 54.0l [3vl]	1
▲		1059569	(0070−)	Belt, V, 31.5l [3v]	1
		360320	(0000−0069)	Belt, V, 31.5l [3v]	1
▽		9006392	(0000−)	Maint Kit, 800Hr [S20 Ele]	1
▲		360686	(0000−)	Belt, V, 33.5l [3v]	1
▲		03670	(0000−)	Belt, V, 54.0l [3vl]	1
▲		1059569	(0070−)	Belt, V, 31.5l [3v]	1
		360320	(0000−0069)	Belt, V, 31.5l [3v]	1
▲		65221	(0000−)	Element, Fltr, Oil, Spin−On	1
▲		9006534	(0000−)	Cap, Breather, Hyd	1
▲		361023	(0000−)	Strainer, Hyd, 010gpm 100mesh	1
▲		1057707	(0000−)	Oil, Hyd [El, Iso 32, 01Gal]	4
▲		1045900	(0000−)	Filter, Cyl, 11.09d, 13.31l, 6.724 Id	1
▲		1044356	(0000−)	Gasket, Cover	1
▲		360134	(0000−)	Seal	1
▲		360136	(0000−)	Flap, Recirculation	1
▲		360761	(0000−)	Seal	1
▲		360784	(0000−)	Seal	1
▲		1047575	(0000−)	Skirt, Neo, .12 2ply, Dust−Cntrl	1
▲		360603	(0000−)	Seal, Rbr, .13 6.34w 36.3l, 12/.28h, Red	1
▲		87689	(0000−)	Cord, Sponge, Neo, 1.0d 36.3l	1
▲		360844	(0000−)	Seal, Door, Dump, Side	2
▲		360627	(0000−)	Bracket, Mtg, Angle, Air Fltr	1
▲		360336	(0000−)	Seal	1
▲		87181	(0000−)	Seal, Hppr, .06 12.5w 36.6l Neo	1
▲		1057602	(0000−)	Skirt, Neo, .12, 12.26w 14.50l, 07/ Sl	2
▲		1047637	(0000−)	Hose, Flex, Vacuum, 04.0d, 21.0l	1
▲		1044357	(0000−)	Seal, Inlet, Vacuum	1

SECTION 2

Contents **Page**

Fig. 1 – Brushes, Replacement 2-2
Fig. 2 – Main Frame and Skirts Group 2-4
Fig. 3 – Brush Door Group, Right Side 2-6
Fig. 4 – Brush Door Group, Left Side 2-8
Fig. 5 – Seat and Cover Group 2-10
Fig. 6 – Backup Alarm and Strobe Light Kit, Rear 2-12
Fig. 7 – Rear Cover Latch Group (0000–0550) . 2-14
Fig. 8 – Rear Cover Latch Group (0551–) 2-16
Fig. 9 – Operator Station Group 2-18
Fig. 10 – Steering Wheel Group 2-20
Fig. 11 – Directional Pedal Group 2-22
Fig. 12 – Wheel and Brake Group, Front 2-24
Fig. 13 – Steering Cylinder Group 2-26
Fig. 14 – Wheel Group, Rear Drive 2-28
Fig. 15 – Brush Lift Group, Main 2-30
Fig. 16 – Brush Cable Lift Group, Main 2-32
Fig. 17 – Brush Drive Group, Main 2-34
Fig. 18 – Brush Drive Motor Group, Main 2-36
Fig. 19 – Brush Lift Group, Side 2-38
Fig. 20 – Brush Motor and Pivot Group, Side . . . 2-40
Fig. 21 – Vacuum Fan Control Group 2-42
Fig. 22 – Vacuum Fan Group 2-44
Fig. 23 – Hopper Lift Arms Group 2-46
Fig. 24 – Hopper Group, Plastic 2-48
Fig. 25 – Hopper Cover Group 2-50
Fig. 26 – Hopper Support Group (0019–) 2-52
Fig. 27 – Hopper Dump Door Group 2-54
Fig. 28 – Hopper Filter Shaker Group 2-56
Fig. 29 – Hydraulic Schematic 2-58
Fig. 30 – Hydraulic Hose Group 2-60
Fig. 31 – Hydraulic Reservoir Group 2-62
Fig. 32 – Hydraulic Control Valve Group 2-64
Fig. 33 – Hydraulic Solenoid Valve Group 2-65
Fig. 34 – Electrical Control Box Group 2-66
Fig. 35 – Electrical Control Box Wire Connection Group 2-68
Fig. 36 – Electrical Schematic 2-70
Fig. 37 – Wire Harnesses Group 2-74
Fig. 38 – Label Group 2-78

Fig. 1 − Brushes, Replacement

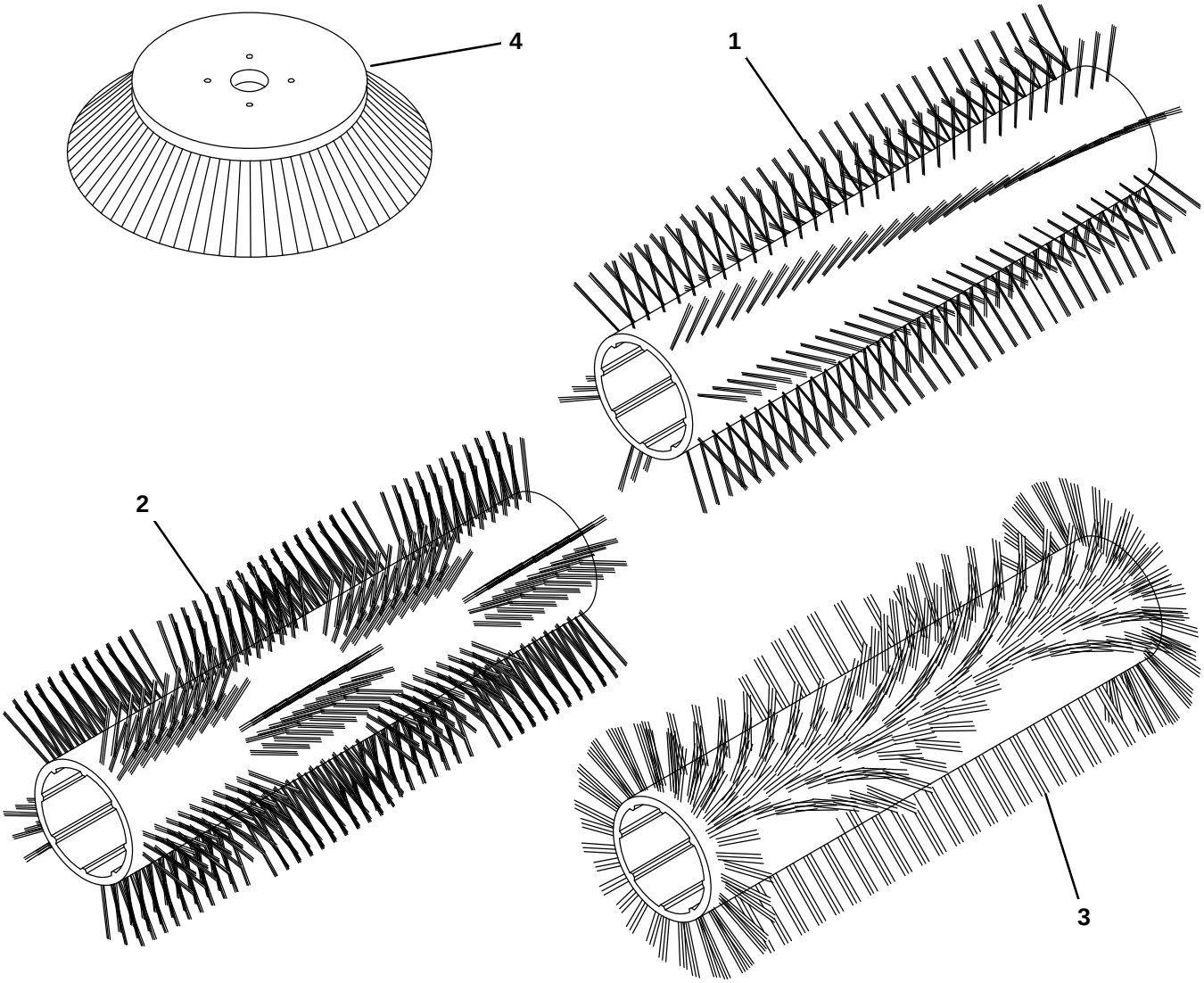

356024− CE

Fig. 1 − Brushes, Replacement

Ref.	Part No.	Serial Number	Description	Qty.
1	87334	(0000−)	Brush−Sweep, Polyester 8 DR	1
1	87099	(0000−)	Brush−Sweep, Polypropylene	1
1	87097	(0000−)	Brush−Sweep, Polypropylene and Wire	1
2	370010	(0000−)	Brush−Sweep, Window, Polypropylene	1
3	370025	(0000−)	Brush−Sweep, Wedge, Polypropylene	1
4	08013N	(0000−)	Brush−Side Swp, Soft Nylon	1
4	59431	(0000−)	Brush−Side Swp, Polypropylene	1

Fig. 2 − Main Frame and Skirts Group

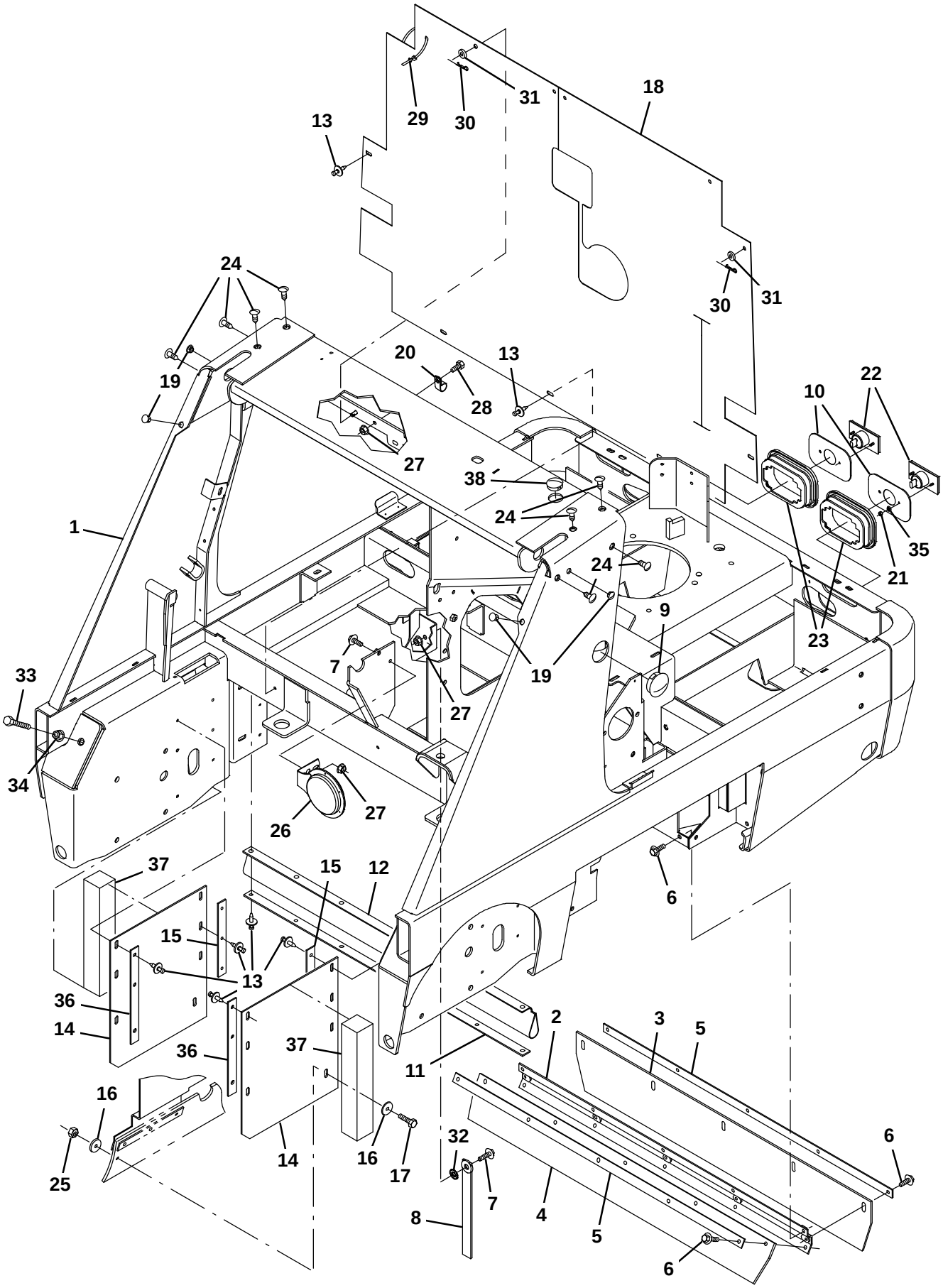

356001− E

Fig. 2 − Main Frame and Skirts Group

Ref.	Part No.	Serial Number	Description	Qty.
1	1042849	(0000−)	Frame Wldt, Ele [S20]	1
2	360138	(0000−)	Channel, Recirculation Flap	1
3	360134	(0000−)	Seal	1
4	360136	(0000−)	Flap, Recirculation	1
5	360137	(0000−)	Strip, Retainer, Flap	2
6	1037346	(0000−)	Screw, Hex, M8 X 1.25 X 25, 9.8, Sems	15
7	1037354	(0000−)	Screw, Hex, M8 X 1.25 X 30, 9.8, Sems	2
8	71579	(0000−)	Strap, Static, W/Grommet, .19 1.1w 25.0l	1
9	1012529	(0000−)	Plug, Hole, Rnd, 2.13h 0.6l, Blk Nyl	1
10	1054566	(0000−)	Plate, Grommet, Taillight, Ele	2
11	87180	(0000−)	Retainer, Seal, Hppr, Top	1
12	87181	(0000−)	Seal, Hppr, .06 12.5w 36.6l Neo	1
13	72968	(0000−)	Rivet, Plstc, .250d X 0.90	27
14	1057602	(0000−)	Skirt, Neo, .12, 12.26w 14.50l, 07/ Sl	2
15	360781	(0000−)	Retainer, Skirt, .12, 1.0w X 08.1l, Pl	4
16	30013	(0000−)	Washer, Flat, 0.31, Fendr	2
17	09740	(0000−)	Screw, Hex, M8 X 1.25 X 20, Ss	1
18	1051250	(0000−)	Seal, Firewall	1
19	02431	(0000−)	Plug, Hole, Rnd, 0.56h .03−.12, Blk Nyl	4
20	67767	(0000−)	Clamp, Cable, Stl, 0.69d X 0.62w, 1hole	2
21	01689	(0000−)	Nut, Hex, Std, #10−32, Ss	4
22	87277	(0000−)	Taillight, 12vdc, 3.6 X 1.9	2
23	1054619	(0000−)	Grommet, Taillight, 5.44 X 3.56	2
24	1055605	(0000−)	Plug, Hole, Rnd, 0.38h .4−.7, Blk Nyl	8
25	08709	(0000−)	Nut, Hex, Lock, M8 X 1.25, Nl	1
26	369702	(0000−)	Horn, 36vdc, 115 Dba	1
27	07791	(0000−)	Nut, Hex, Flng, M8 X 1.25	3
28	39277	(0000−)	Screw, Hex, M8 X 1.25 X 25, 8.8	1
29	44961	(0000−)	Tie, Cable, Nyl, 14.5l .30w 4.0 Max D	1
30	86866	(0000−)	Pin, Cotter, Hair, 0.38d .072 Wir	4
31	32491	(0000−)	Washer, Flat, 0.31, Std	4
32	41141	(0000−)	Washer, Lock, Int−Ext, 0.31	1
33	06969	(0000−)	Screw, Hex, M12 X 1.75 X 40, 8.8	2
34	07793	(0000−)	Nut, Hex, Flng, M12 X 1.75	2
35	32980	(0000−)	Washer, Lock, Int, 10	4
36	1057684	(0000−)	Retainer, Skirt, .12, 1.0w X 10.4l, Pl	2
37	1042791	(0000−)	Insulation, Acstc, 2.0, 02.0 X 12.0	2
38	1061216	(0162−)	Plug, Hole, Rnd, 1.37h 0.45l, Blk Nyl	1

Fig. 3 − Brush Door Group, Right Side

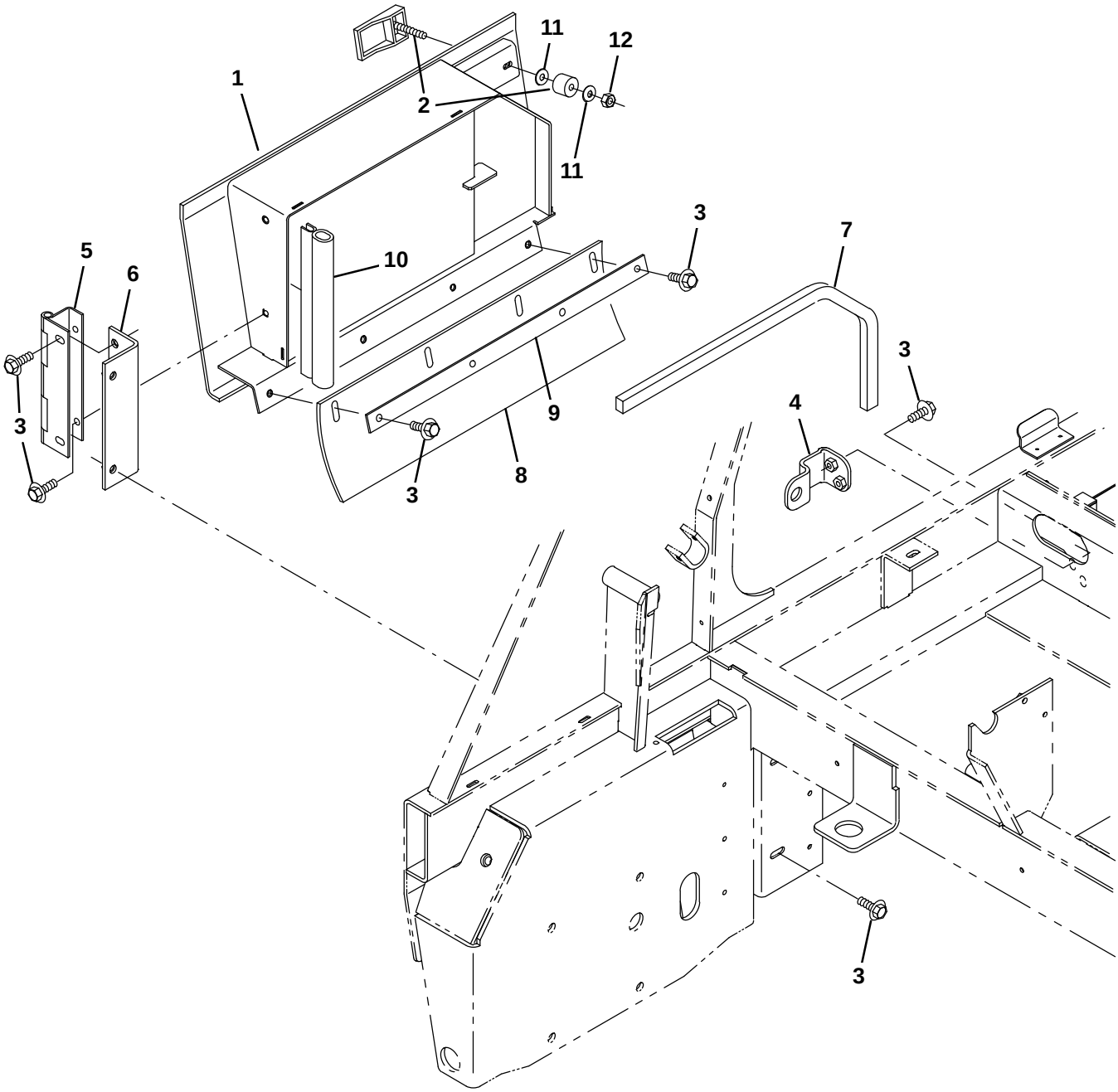

354937 − ALL

Fig. 3 − Brush Door Group, Right Side

Ref.	Part No.	Serial Number	Description	Qty.
1	1044844	(0000−)	Door Wldt, Brush, Rh	1
2	360388	(0000−)	Latch, Swell	1
3	1020341	(0000−)	Screw, Hex, M8 X 1.25 X 20, Ss, Sems	12
4	1048746	(0000−)	Bracket, Stop, Brush Door	1
5	360283	(0000−)	Hinge, .38pin .12 3.5w 07.8l, 4/0.38h	1
6	1048750	(0000−)	Bracket, Hinge, Door	1
7	360319	(0000−)	Seal, Rbr, Open, 0.38, 1.25w 25.5l	1
8	360784	(0000−)	Seal	1
9	361306	(0000−)	Retainer, Skirt, .12, 1.0w X 19.3l, Pl	1
10	363502	(0000−)	Seal, Bulb, Str, 0.50d .13grip 009.4l	4
11	39349	(0000−)	Washer, Flat, 0.31, Sae	2
12	32960	(0000−)	Nut, Hex, Lock, .31−24, Nl	1

Fig. 4 − Brush Door Group, Left Side

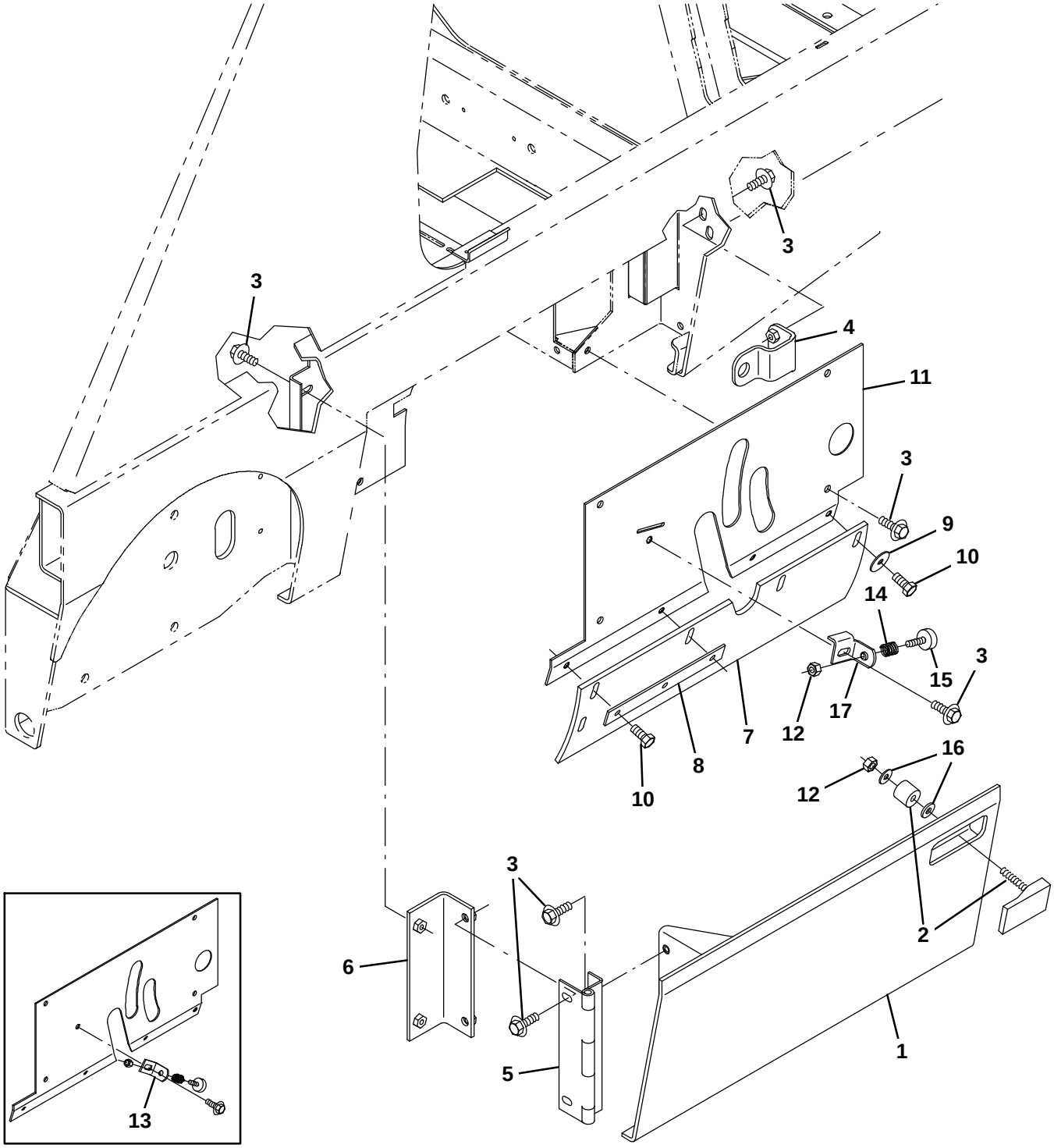

356002− E

Fig. 4 − Brush Door Group, Left Side

Ref.	Part No.	Serial Number	Description	Qty.
1	1044845	(0000−)	Door Wldt, Brush, Lh	1
2	360388	(0000−)	Latch, Swell	1
3	1037346	(0000−)	Screw, Hex, M8 X 1.25 X 25, 9.8, Sems	13
4	1048746	(0000−)	Bracket, Stop, Brush Door	1
5	360283	(0000−)	Hinge, .38pin .12 3.5w 07.8l, 4/0.38h	1
6	1048750	(0000−)	Bracket, Hinge, Door	1
7	360761	(0000−)	Seal	1
8	360781	(0000−)	Retainer, Skirt, .12, 1.0w X 08.1l, Pl	1
9	30013	(0000−)	Washer, Flat, 0.31, Fendr	1
10	49826	(0000−)	Screw, Hex, M8 X 1.25 X 16, Nl, Ss	4
11	1049199	(0000−)	Plate, Seal	1
12	41169	(0000−)	Nut, Hex, Lock, .25−20, Nl, Ss	1
13	1049208	(0000−0193)	Bracket Wldt, Stop, Brush	1
14	86444	(0000−)	Spring, Cmpr, 0.60od .07wir 00.8l	1
15	20802	(0000−)	Bumper, Rbr, 1.0d 0.38th .25−20	1
16	39349	(0000−)	Washer, Flat, 0.31, Sae	2
17	1063616	(0194−)	Bracket Wldt, Stop, Brush	1

Fig. 5 − Seat and Cover Group

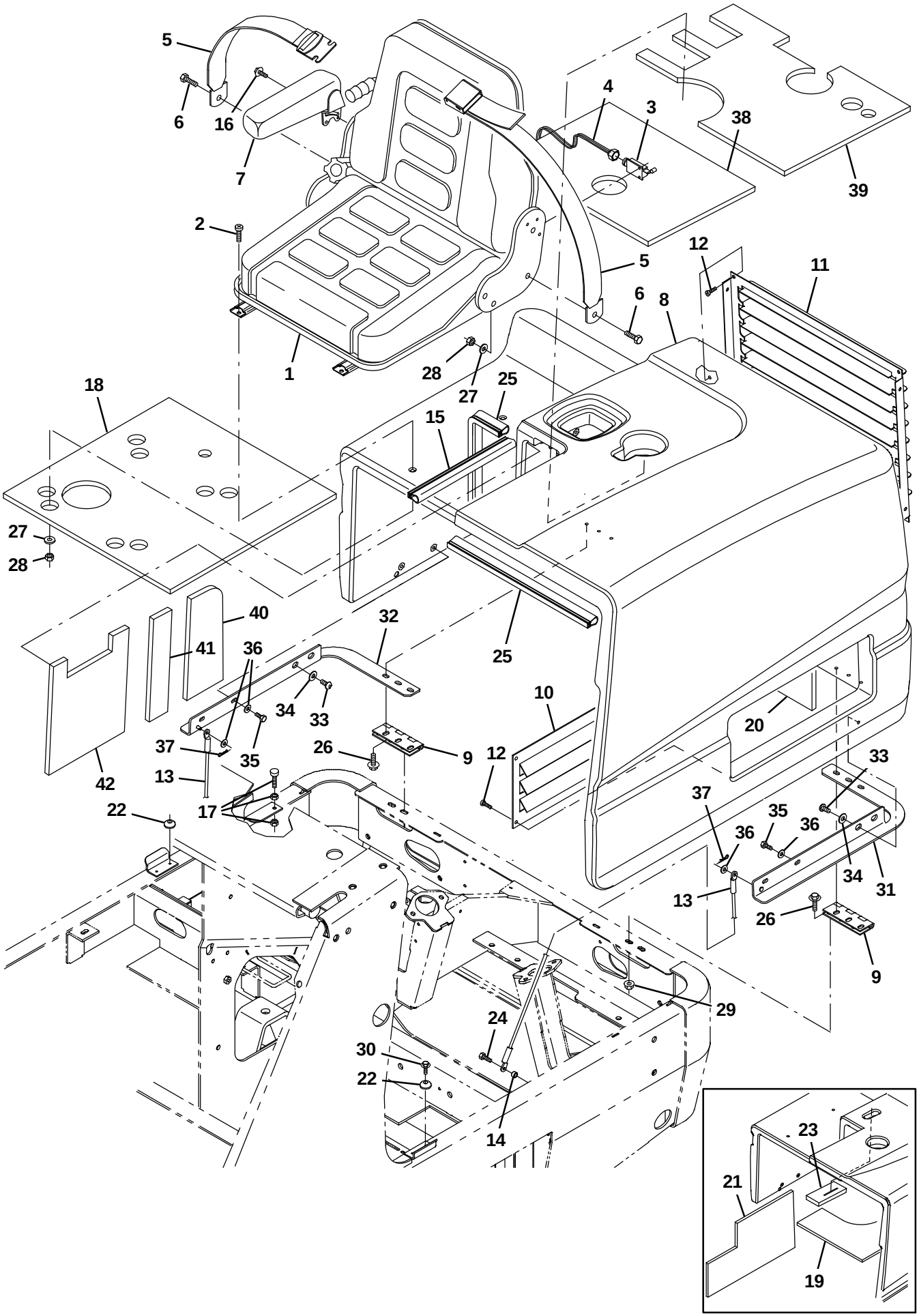

356025 − CE

Fig. 5 − Seat and Cover Group

Ref.	Part No.	Serial Number	Description	Qty.
1	1056543	(0000−)	Seat, Suspension [Grammer Gs12]	1
2	49177	(0000−)	Screw, Pan, Phl, .31−18 X 1.00, G2	4
3	69971	(0000−)	Switch, Seat	1
4	1056539	(0000−)	Harness, Seat [S20]	1
5	30533	(0000−)	Seatbelt, 60.0L	1
6	06955	(0000−)	Screw, Hex, M8 X 1.25 X 35, 8.8	4
7	71477	(0000−)	Armrest Assy, Rh, F/53845 [Grammer]	1
8	1060541	(0000−0550)	Shroud, Rear, Trimmed	1
8	1064956	(0551−)	Shroud, Rear [S20]	1
9	360704	(0000−)	Hinge, .25pin .12 3.0w 04.5l, 6/0.38sl	2
10	1049988	(0000−)	Panel, Louver	1
11	1049987	(0000−)	Panel, Louver	1
12	360973	(0000−)	Screw, Pan, 12−16 X 0.50, F/ Plstc	8
13	1056045	(0000−)	Cable, Glv .13d 024.2l 330eye /330eye	2
14	222516	(0000−)	Sleeve, P/M, 0.32b 0.50d 0.3l [430ss]	2
15	391803	(0000−)	Seal, Bulb, 90, 1.33 .06−.09grip 032.5l	1
16	16931	(0000−)	Screw, Hex, M8 X 1.25 X 20, 8.8	4
17	75128	(0000−)	Spindle, Adjustment	1
18	361345	(0000−)	Insulation, Acstc, 0.5, 21.4 X 20.6 C−O	1
19	361342	(0000−0550)	Insulation, Acstc, 0.5, 32.0 X 21.6 Ntch	1
20	361344	(0000−)	Insulation, Acstc, 0.5, 31.6 X 14.1 Ntch	1
21	361343	(0000−0550)	Insulation, Acstc, 0.5, 21.5 X 12.2 Ntch	1
22	361554	(0000−)	Bumper, Rbr, 0.90d 0.38th 0.18h	2
23	361951	(0000−0550)	Insulation, Acstc, 0.8, 06.6 X 03.0 Slit	1
24	11329	(0000−)	Screw, Hex, M6 X 1.00 X 16, Nl, Ss	2
25	10576	(0000−)	Seal, Bulb, 90, 0.50d .06−.09grip 022.5l	1
26	1037346	(0000−)	Screw, Hex, M8 X 1.25 X 25, 9.8, Sems	8
27	32491	(0000−)	Washer, Flat, 0.31, Std	8
28	32983	(0000−)	Nut, Hex, Lock, .31−18, Nl	6
29	07791	(0000−)	Nut, Hex, Flng, M8 X 1.25	6
30	223198	(0000−)	Screw, Hex, M5 X 0.80 X 10, Fmg	2
31	1058717	(0152−)	Plate Wldt, Lh	1
32	1058722	(0152−)	Plate Wldt, Rh	1
33	17284	(0152−)	Screw, Btn, M8 X 1.25 X 16, Ss	4
34	32491	(0152−)	Washer, Flat, 0.31, Std	4
35	11329	(0152−)	Screw, Hex, M6 X 1.00 X 16, Nl, Ss	6
36	32490	(0152−)	Washer, Flat, 0.25, Std	2
37	08085	(0152−)	Pin, Cotter, Hair, 0.31d .058 Wir	2
38	1068101	(0551−)	Insulation, Acstc, 0.5, 13.0 X 17.8 Ntch	1
39	1068102	(0551−)	Insulation, Acstc, 0.5, 15.4 X 20.5 Ntch	1
40	1068103	(0551−)	Insulation, Acstc, 0.5, 4.5 X 11.0 Ntch	1
41	1068104	(0551−)	Insulation, Acstc, 0.5, 2.3 X 11.1 Ntch	1
42	1068105	(0551−)	Insulation, Acstc, 0.5, 9.2 X 11.8 Ntch	1

Fig. 6 − Backup Alarm and Strobe Light Kit, Rear

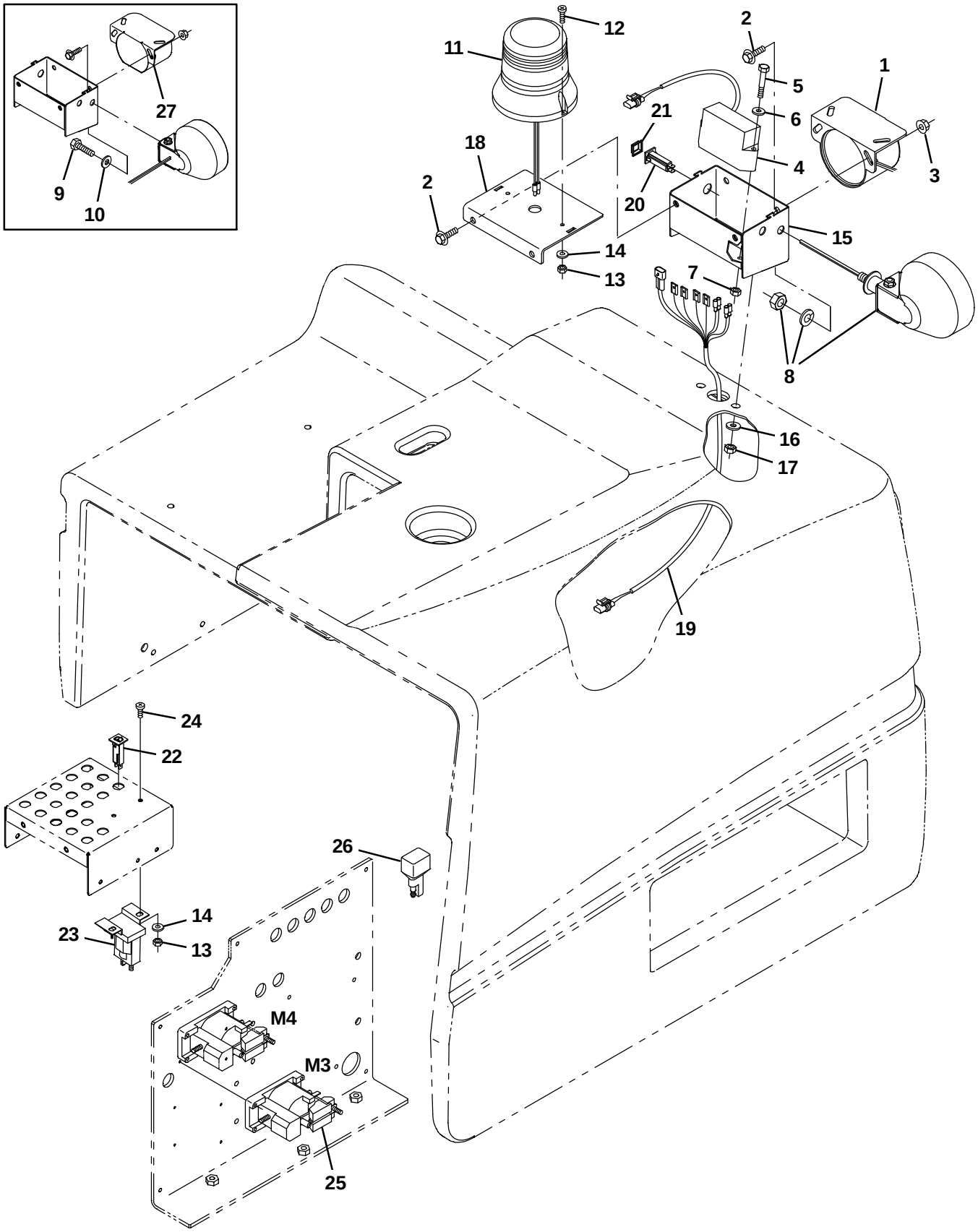

354996− E, CE

Fig. 6 − Backup Alarm and Strobe Light Kit, Rear

	Ref.	Part No.	Serial Number	Description	Qty.
	1	9007131	(0162−)	Alarm Assy, Backup, 12/48vdc	1
	2	1037346	(0000−)	Screw, Hex, M8 X 1.25 X 25, 9.8, Sems	6
	3	07791	(0000−)	Nut, Hex, Flng, M8 X 1.25	2
	4	72164	(0000−)	Flasher, 12/48vdc 5a [6309/12−48v]	1
	5	06949	(0000−)	Screw, Hex, M6 X 1.00 X 50, 8.8	2
	6	32483	(0000−)	Washer, Flat, 0.25, Sae	2
	7	08708	(0000−)	Nut, Hex, Lock, M6 X 1.00, Nl	2
	8	1072011	(0000−)	Light, Led, 36vdc, 4.8d [Sealed Beam]	1
	9	39807	(0000− xxxx)	Screw, Hex, .50−13 X 0.75, G5	1
	10	32486	(0000− xxxx)	Washer Flat,0.50,Sae	1
▽	11	1017250	(0000−)	Light, Strobe, Amb, 12−48vdc	1
▲		9000846	(0000−)	Lamp, Bulb	1
▲		9000879	(0000−)	Lens, Amb, F/ Revl / Flasher	1
	12	06933	(0000−)	Screw, Pan, Phl, M5 X 0.80 X 16, 4.8	2
	13	06549	(0000−)	Nut, Hex, Lock, M5 X 0.80, Nl	4
	14	19066	(0000−)	Washer, Flat, 10	4
	15	1049554	(0000−)	Angle, Mtg, Alarm	1
	16	32491	(0000−)	Washer, Flat, 0.31, Std	2
	17	08709	(0000−)	Nut, Hex, Lock, M8 X 1.25, Nl	2
	18	1049553	(0000−)	Plate, Mtg, Light	1
	19	1052474	(0000−)	Harness, Alarm / Strobe, 36vdc [S20]	1
	20	1046882	(0000−)	Circuitbreaker, 05.0a, Resetable	1
	21	1046173	(0000−)	Boot, Circuitbreaker	1
	22	1046152	(0000−)	Circuitbreaker, 2.5a, Resetable	1
	23	386810	(0000−)	Contactor, 36vdc, 100a, Sp, No	1
	24	09200	(0000−)	Screw, Pan, Phl, M5 X 0.80 X 12, Ss	2
	25	86377	(0000−)	Contactor, 36vdc [Spco]	1
	26	222290	(0000−)	Diode, Ele, Plug	1
	27	72171	(0000−0161)	Alarm Assy, Backup, 12−48vdc 82−102dba	1
		1027798	(0000−)	Lens, Red, F/ Revl / Flasher	1
		1027800	(0000−)	Lens, Blu, F/ Revl / Flasher	1

Fig. 7 − Rear Cover Latch Group (0000−0550)

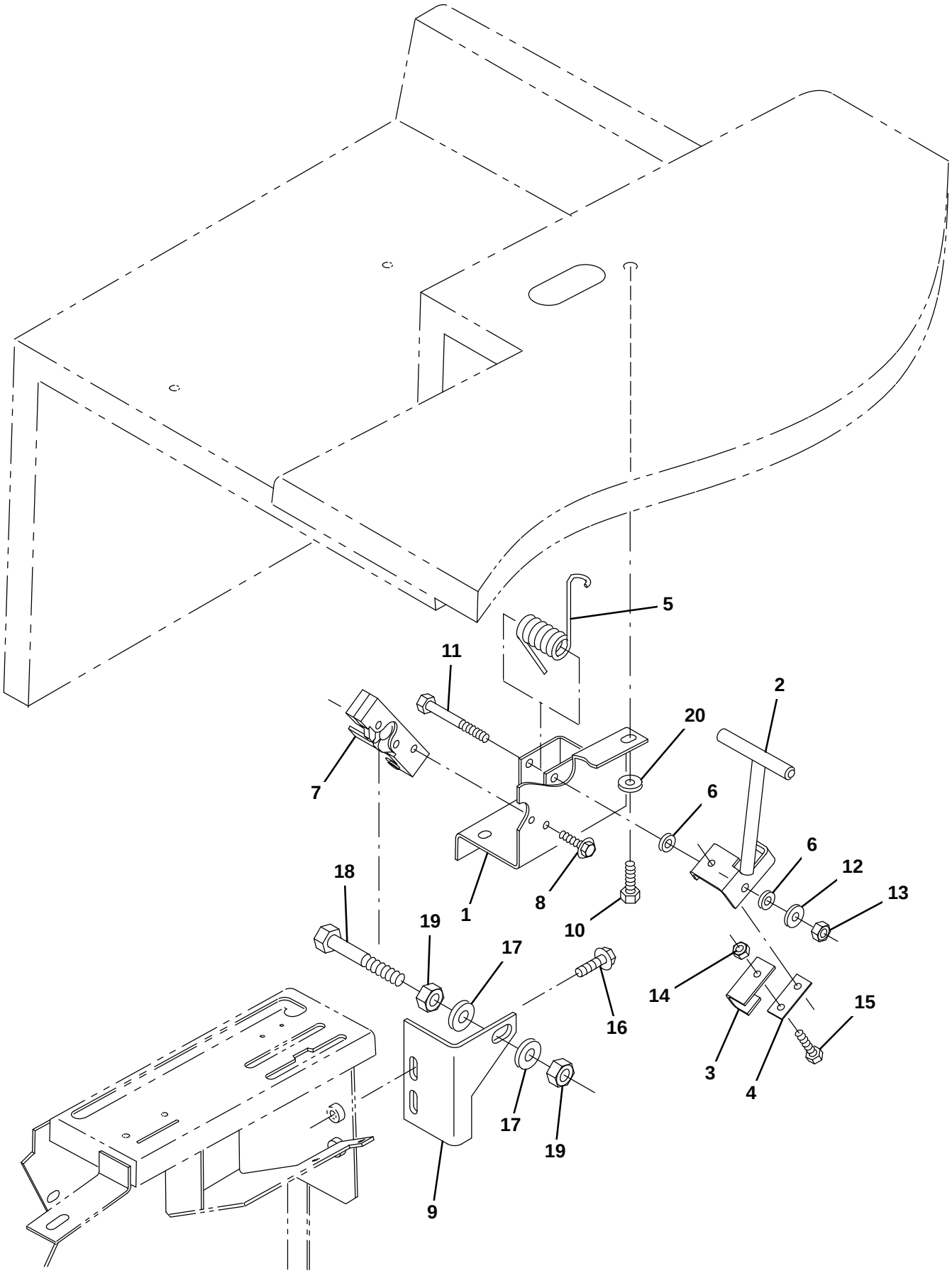

354924 − ALL

Fig. 7 − Rear Cover Latch Group (0000−0550)

Ref.	Part No.	Serial Number	Description	Qty.
1	1052805	(0000−0550)	Bracket Wldt, Latch	1
2	1052817	(0000−0550)	Handle Wldt, Latch, Shrd	1
3	1052804	(0000−0550)	Channel, Latch	1
4	361165	(0000−0550)	Spring, Flat, .06, 0.75w X 01.8l, 2/.28h	1
5	87581	(0000−0550)	Spring, Tors, 0.81id .12wir 08.0coil	1
6	43454	(0000−0550)	Washer, Flat, 0.34b 0.69d .06, Nyl	2
7	72439	(0000−0550)	Latch	1
8	16949	(0000−0550)	Screw, Hex, .25−20 X 0.75, Sems	2
9	1052803	(0000−0550)	Bracket, Angle, Mtg, Pin, Latch	1
10	15675	(0000−0550)	Screw, Hex, M8 X 1.25 X 16, Ss	4
11	76960	(0000−0550)	Screw, Hex, .31−18 X 2.25, G5	1
12	32491	(0000−0550)	Washer, Flat, 0.31, Std	1
13	32983	(0000−0550)	Nut, Hex, Lock, .31−18, Nl	1
14	08708	(0000−0550)	Nut, Hex, Lock, M6 X 1.00, Nl	2
15	87308	(0000−0550)	Screw, Hex, M6 X 1.00 X 12, 8.8	2
16	1037346	(0000−0550)	Screw, Hex, M8 X 1.25 X 25, 9.8, Sems	2
17	32486	(0000−0550)	Washer Flat,0.50,Sae	2
18	27985	(0000−0550)	Screw, Hex, .50−13 X 2.50, G5	1
19	32523	(0000−0550)	Nut, Hex, Jam, .50−13	2
20	32491	(0000−0550)	Washer, Flat, 0.31, Std	4

Fig. 8 − Rear Cover Latch Group (0551−)

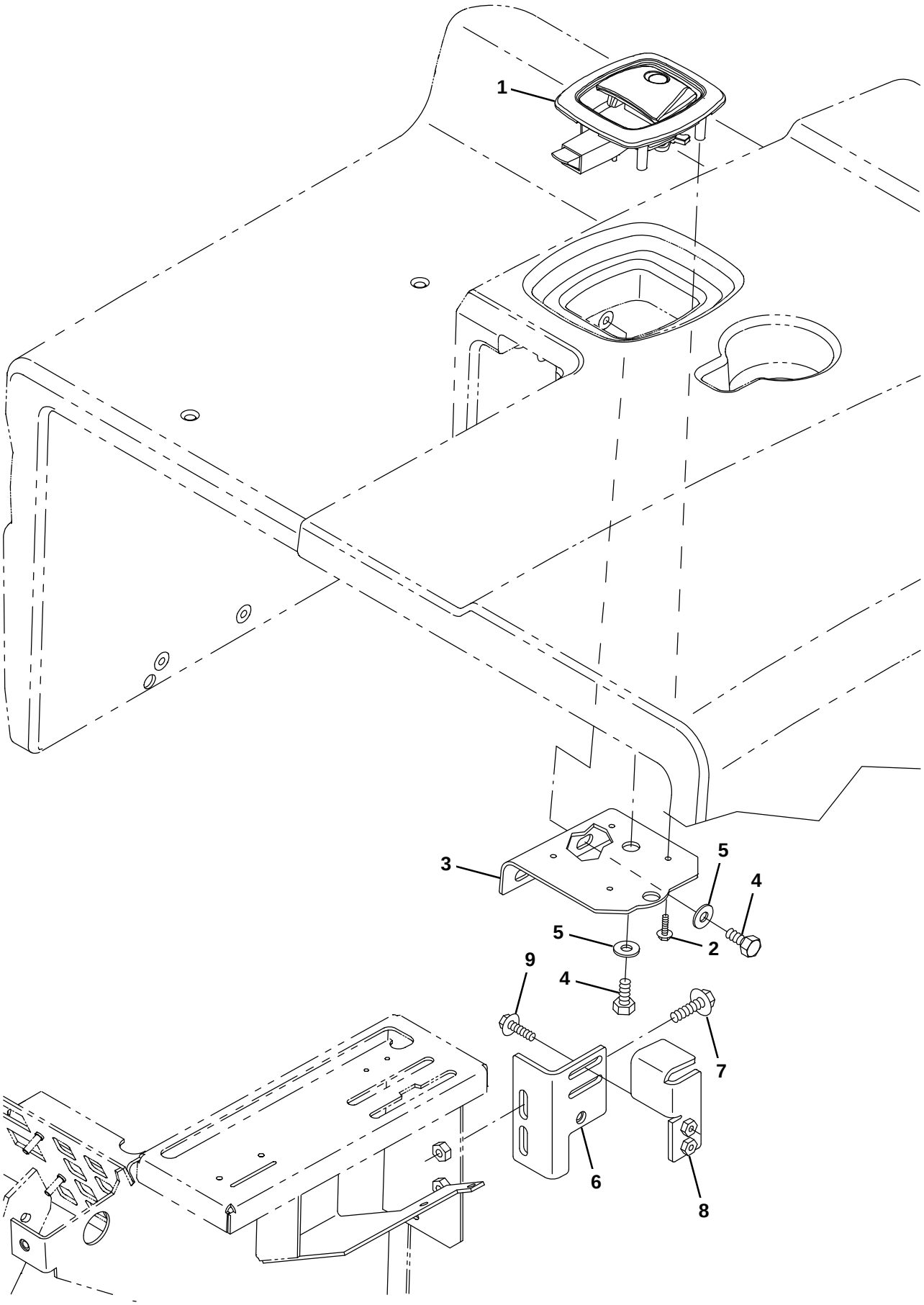

356272 − ALL

Fig. 8 − Rear Cover Latch Group (0551−)

Ref.	Part No.	Serial Number	Description	Qty.
1	1068098	(0551−)	Latch, Paddle, Rwk	1
2	71026	(0551−)	Screw, Hex, M4 X 0.70 X 20, Fmg	1
3	1066146	(0551−)	Plate, Mtg, Latch	1
4	15675	(0551−)	Screw, Hex, M8 X 1.25 X 16, Ss	1
5	32491	(0551−)	Washer, Flat, 0.31, Std	1
6	1065829	(0551−)	Bracket, Latch, Mtg, Strike	2
7	1037346	(0551−)	Screw, Hex, M8 X 1.25 X 25, 9.8, Sems	1
8	1066138	(0551−)	Bracket, Adj, Strike	2
9	1036892	(0551−)	Screw, Hex, M6 X 1.00 X 25, 9.8, Sems	1

Fig. 9 − Operator Station Group

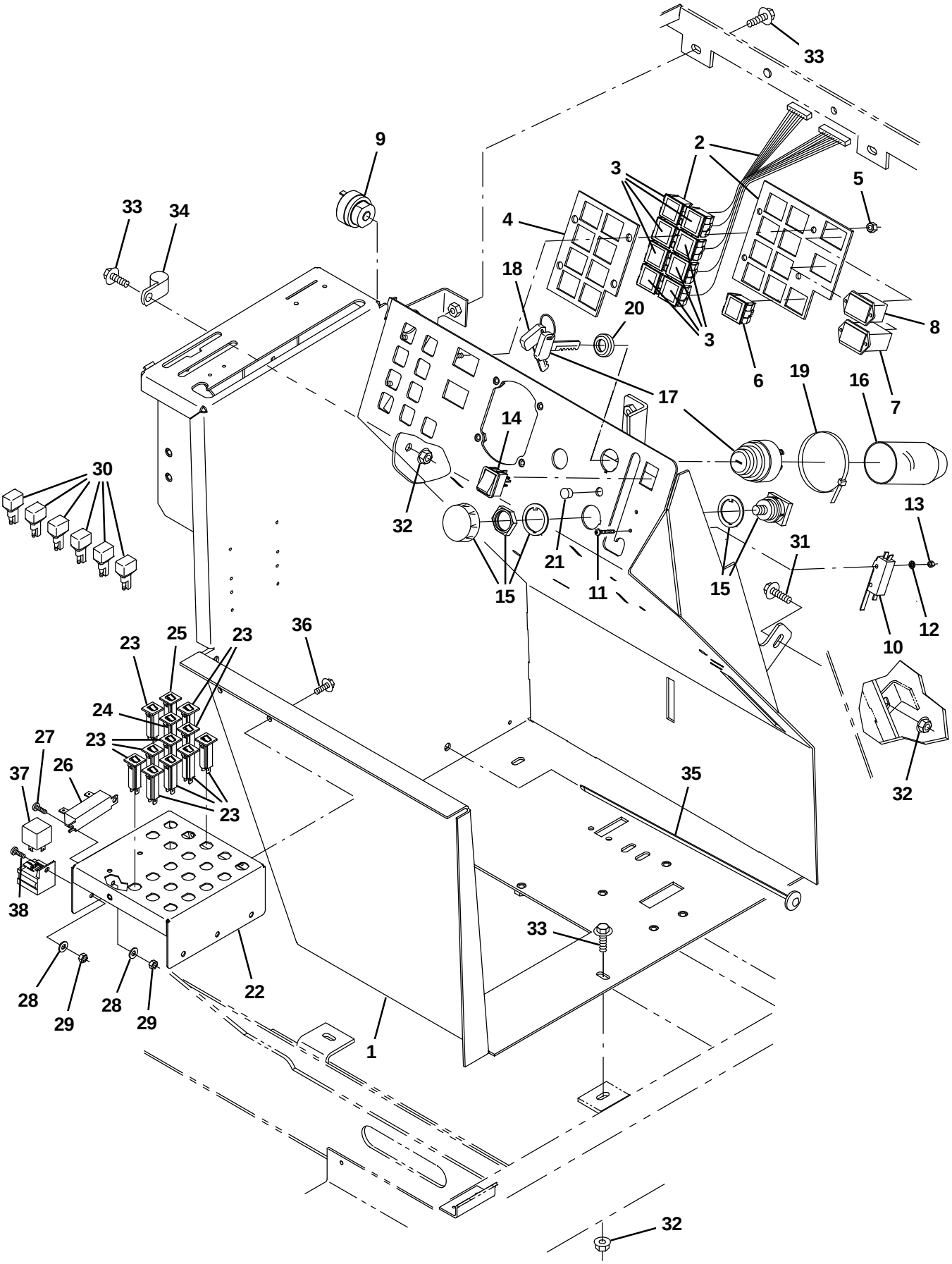

354931 − E, DE

Fig. 9 − Operator Station Group

	Ref.	Part No.	Serial Number	Description	Qty.
	1	9006979	(0000−)	Panel, Oprtr Station, W/ Label, Ce [S20e]	1
▽	2	1051135	(0000−)	Panel Assy, Indicator Light, Ele	1
▲	3	361074	(0000−)	Light, Panl, 36vdc, 1.1 X 1.0	8
	4	1045211	(0000−)	Seal, Rbr, Clsd, 0.38, Instmt Panl	1
	5	08708	(0000−)	Nut, Hex, Lock, M6 X 1.00, Nl	4
	6	361074	(0000−)	Light, Panl, 36vdc, 1.1 X 1.0	1
	7	377433	(0000−0523)	Gauge, Hourmeter, 12−60vdc, Analog [10k]	1
	7	1068904	(0524−)	Gauge, Hourmeter, 05−277vdc/Vac, 2−Hole	1
	8	1038957	(0000−)	Gauge, Discharge, Battery, 36vdc, Led	1
	9	386346	(0000−)	Alarm, Audio, 10−48vdc [Mallory]	1
	10	1008142	(0000−)	Switch, Snap, 25a Spdt	1
	11	1054872	(0000−)	Screw, Pan, Phl, M3 X 0.5 X 25, Blk	2
	12	39658	(0000−)	Washer, Lock, Int, 04	2
	13	01754	(0000−)	Nut, Hex, Std, M3 X 0.50, 8	2
	14	1048456	(0000−)	Switch, Rocker, 3 Position	1
	15	1053842	(0000−)	Switch, Safety, Shutoff	1
	16	383165	(0000−)	Boot, Switch, Ignition	1
▽	17	87536	(0000−)	Switch, Ignition [Ku]	1
▲	18	87866	(0000−)	Key, Ignition [Set Of 2]	1
	19	49263	(0000−)	Tie, Cable, Nyl, 11.4l .19w 3.0 Max D	1
	20	382516	(0000−)	Boot, .63id .29l .90w	1
	21	33807	(0000−)	Plug, Hole, Rnd, 0.44h .03−.12, Blk Nyl	1
	22	1057040	(0000−)	Bracket, Mtg, Circuitbreaker, Ele	1
	23	1064184	(0000−)	Circuitbreaker, 2.5a, Resetable	10
	24	1064188	(0000−)	Circuitbreaker, 15a, Resetable	1
	25	1064189	(0000−)	Circuitbreaker, 20a, Resetable	1
	26	87349	(0000−)	Resistor, 040.000hm, 0040watt	1
	27	09200	(0000−)	Screw, Pan, Phl, M5 X 0.80 X 12, Ss	2
	28	19066	(0000−)	Washer, Flat, 10	3
	29	06549	(0000−)	Nut, Hex, Lock, M5 X 0.80, Nl	3
	30	222290	(0000−)	Diode, Ele, Plug	6
	31	1037354	(0000−)	Screw, Hex, M8 X 1.25 X 30, 9.8, Sems	1
	32	07791	(0000−)	Nut, Hex, Flng, M8 X 1.25	5
	33	1037346	(0000−)	Screw, Hex, M8 X 1.25 X 25, 9.8, Sems	6
	34	58366	(0000−)	Clamp, Cable, Stl, 1.25d X 1.00w, 1hole	1
	35	1041873	(0000−)	Fastener, Wire, Tie [Button Head]	3
	36	1040467	(0000−)	Screw, Hex, M6 X 1.00 X 20, 9.8, Sems	2
	37	398526	(0000−)	Relay, 36vdc, 005a, Spdt No [Greenwich]	1
	38	39239	(0000−)	Screw, Pan, Phl, 10−32 X 0.50, G2, Blk	1

Fig. 10 − Steering Wheel Group

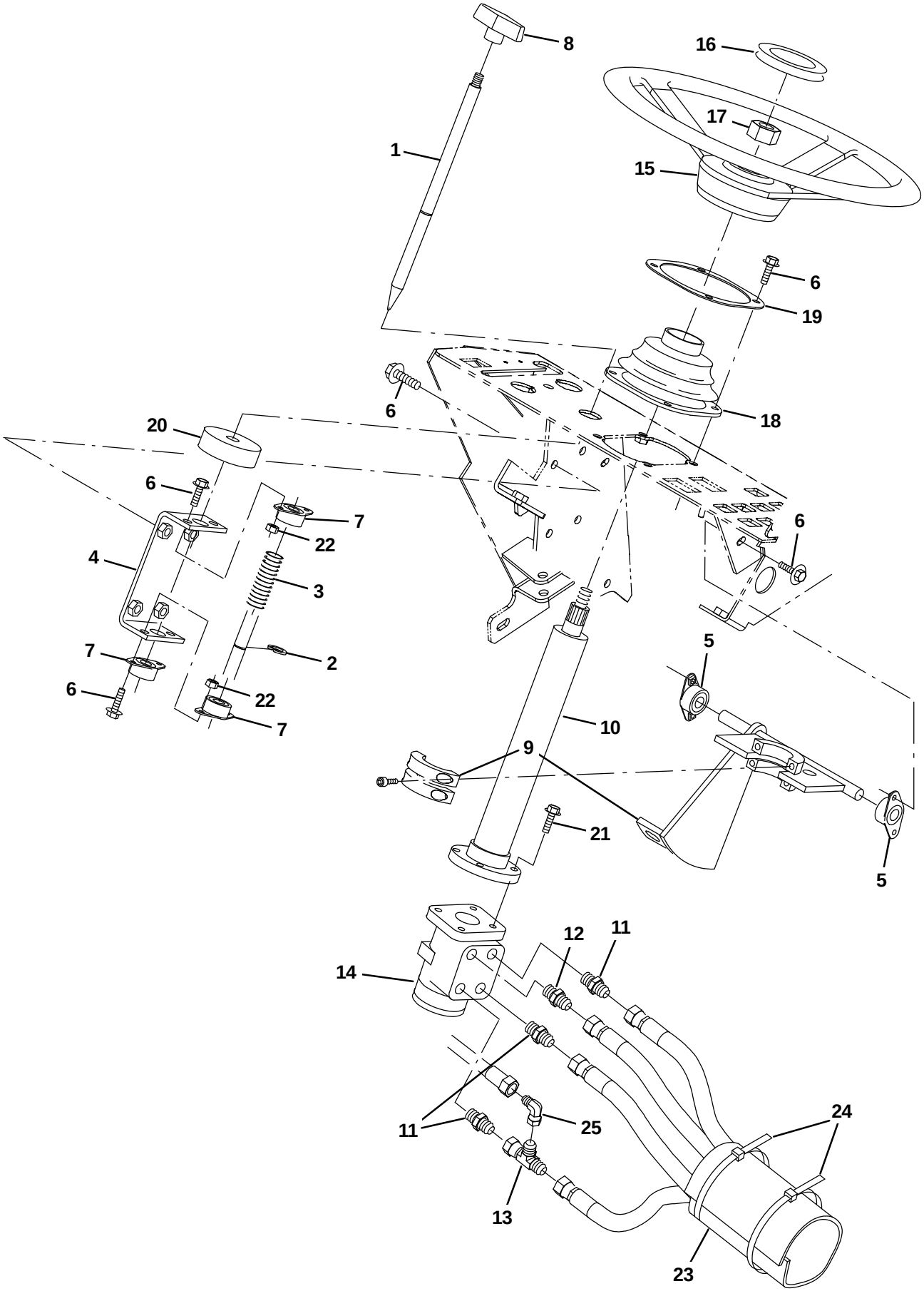

354988 − E

Fig. 10 − Steering Wheel Group

Ref.	Part No.	Serial Number	Description	Qty.
1	360711	(0000−)	Rod, Latch, Tilt, Steering	1
2	70717	(0000−)	Ring, Retaining, Ext, 0.50d, Hd	1
3	22290	(0000−)	Spring, Cmpr, 0.72od .06wir 02.3l	1
4	1045222	(0000−)	Channel, Mtg, Steering Latch	1
5	70709	(0000−)	Bearing, Flng, 2hole, 0.50b	2
6	1036892	(0000−)	Screw, Hex, M6 X 1.00 X 25, 9.8 Sems	16
7	47585	(0000−)	Bearing, Flng, 2hole, 0.50b [Nyl]	3
8	04706	(0000−)	Knob, Tee, 0.38−16, 2.5 X 1.0 1.1l,Plstc	1
9	1051510	(0000−)	Bracket Wldt, Steering, Tilt	1
10	1048351	(0000−)	Column, Steering, 09.9l 0.86d 36tooth	1
11	56690	(0000−0820)	Fitting, Hyd, Str, Jm06/Om06	3
11	762433	(0821−)	Fitting, Hyd, Str, Fm06/Om06	5
12	56835	(0000−0820)	Fitting, Hyd, Str, Jm08/Om06	1
12	762459	(0000−)	Fitting, Hyd, Str, Fm08/Om06	1
13	42215	(0000−0820)	Fitting, Hyd, Tee, Jf06/Jm06/Jm06, Run	1
13	762435	(0821−)	Fitting, Hyd, Tee, Ff06/Fm06/Fm06, Run	1
14	74173	(0000−)	Steer−Control, Hyd04, 07.3 0600 (See Breakdown)	1
15	1058996	(0000−)	Wheel, Steering, 14.0D 0.81B 36Tooth	1
16	1024478	(0000−)	Button, Cntrl, Horn	1
17	56185	(0000−)	Nut, Hex, Jam, M20 X 1.5	1
18	70622	(0000−)	Boot, Bellows, 3.1l 4.4w 2.8h 1hole, Neo	1
19	360867	(0000−)	Plate, Mtg	1
20	75968	(0000−)	Insulation, Acstc, Rnd, 0.8, 02.5d 0.5h	1
21	21195	(0000−)	Screw, Hex, .38−16 X 0.75, G5	4
22	08708	(0000−)	Nut, Hex, Lock, M6 X 1.00, Nl	4
23	82833	(0000−)	Sleeve, Nyl, 1.22id 35.0l	1
24	49263	(0000−)	Tie, Cable, Nyl, 11.4l .19w 3.0 Max D	1
25	47504	(0000−0820)	Fitting, Hyd, E90, Jf06/Jm06	1
25	1072195	(0821−)	Fitting, Hyd, E90, Ff06/Fm06	1

Fig. 11 − Directional Pedal Group

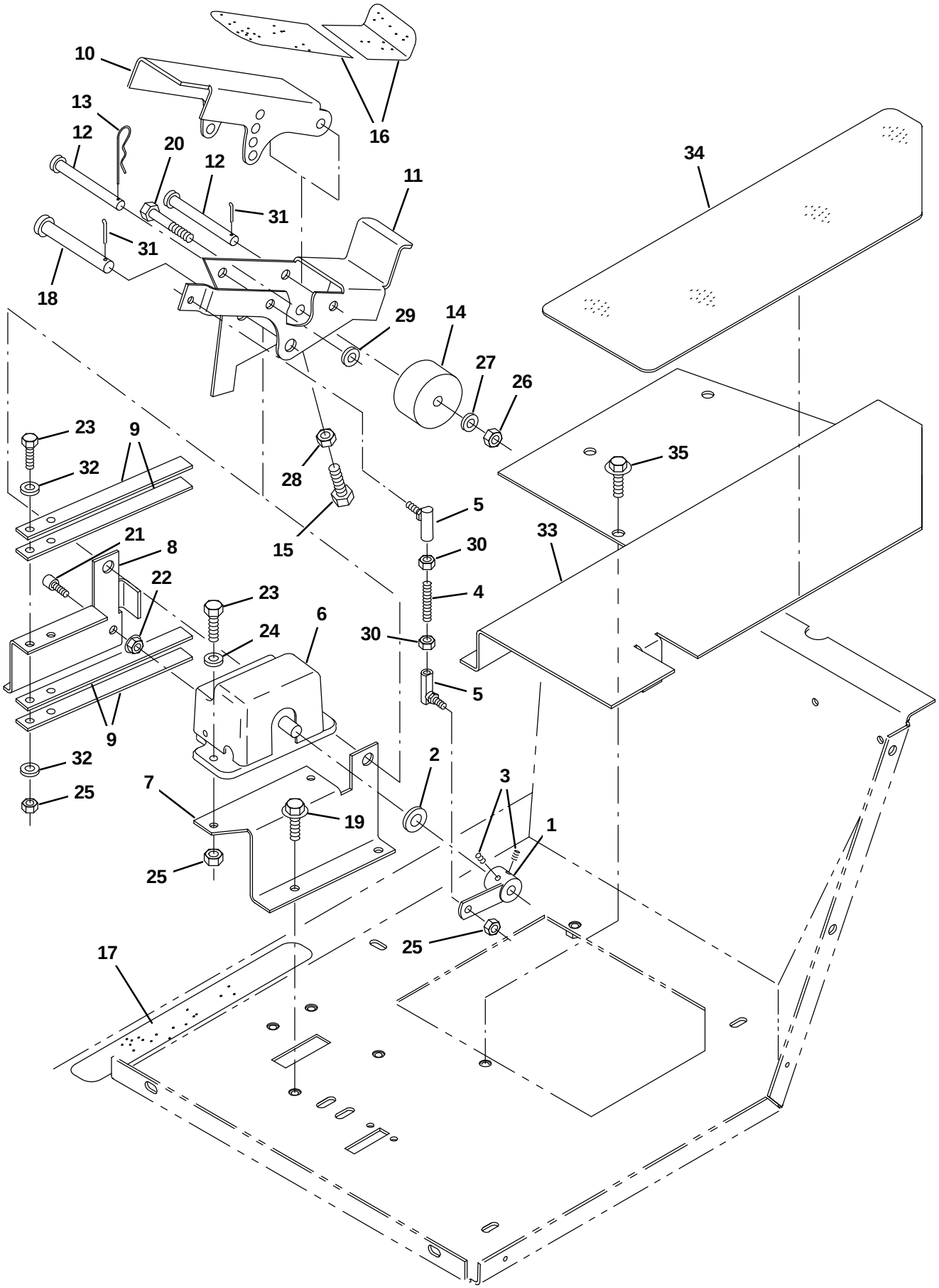

354989 − E

Fig. 11 − Directional Pedal Group

Ref.	Part No.	Serial Number	Description	Qty.
1	1050955	(0000−)	Arm Wldt, Cntrl, Dir	1
2	43611	(0000−)	Washer, Flat, 0.39b 0.75d .06, Nyl	1
3	17186	(0000−)	Screw, Set, Soc, M5 X 0.80 X 8, Pl [45h]	2
4	14397	(0000−)	Rod, Thrd, 2 End, M06 X 1.0 02.2l	1
5	12263	(0000−)	Balljoint, M6 X 1.0 Fem, M6 X 1.0 Mal	2
6	14368	(0000−)	Throttle, Electronic, 0000/5000 Ohm	1
7	1050957	(0000−)	Bracket, Mtg, Pedal, Lh	1
8	1052531	(0000−)	Bracket, Mtg, Pedal, Rh	1
9	49681	(0000−)	Spring, Flat, .06, 0.75w X 07.8l	4
10	1052540	(0000−)	Pedal, Propel, Adj, Upper	1
11	1052541	(0000−)	Pedal Wldt, Propel, Lower, Adj	1
12	72084	(0000−)	Pin, Clevis, 0.37d X 3.50l	2
13	44906	(0000−)	Pin, Cotter, Hair, 0.38d .093 Wir	1
14	87725	(0000−)	Spacer, Plstc, 0.41b 2.25d 1.30l, Nyl	1
15	36801	(0000−)	Screw, Hex, .38−16 X 1.50, Fl	1
16	75430	(0000−)	Tread, Non−Skid, 02.2w 15.5l	1
17	86798	(0000−)	Tread, Non−Skid, 01.4w 12.0l	1
18	06474A	(0000−)	Pin, Clevis, 0.50d X 3.50l	1
19	1037346	(0000−)	Screw, Hex, M8 X 1.25 X 25, 9.8, Sems	4
20	06963	(0000−)	Screw, Hex, M10 X 1.50 X 60, 8.8	1
21	39308	(0000−)	Screw, Soc, M8 X 1.25 X 25, 12.9	1
22	07791	(0000−)	Nut, Hex, Flng, M8 X 1.25	1
23	06943	(0000−)	Screw, Hex, M6 X 1.00 X 20, 8.8	5
24	32483	(0000−)	Washer, Flat, 0.25, Sae	2
25	08708	(0000−)	Nut, Hex, Lock, M6 X 1.00, Nl	5
26	41430	(0000−)	Nut, Hex, Lock, M10 X 1.5, Nl	1
27	32485	(0000−)	Washer, Flat, 0.38, Sae	1
28	25014	(0000−)	Nut, Hex, Std, .38−16	1
29	32486	(0000−)	Washer Flat,0.50,Sae	1
30	41359	(0000−)	Nut, Hex, Std, M6 X 1.00, 8	2
31	08182	(0000−)	Pin, Cotter, .125 X 1.00	2
32	32490	(0000−)	Washer, Flat, 0.25, Std	4
33	1048508	(0000−)	Cover, Plt, Floor	1
34	360906	(0000−)	Tread, Non−Skid, 06.5w 20.6l	1
35	1037346	(0000−)	Screw, Hex, M8 X 1.25 X 25, 9.8, Sems	4

Fig. 12 − Wheel and Brake Group, Front

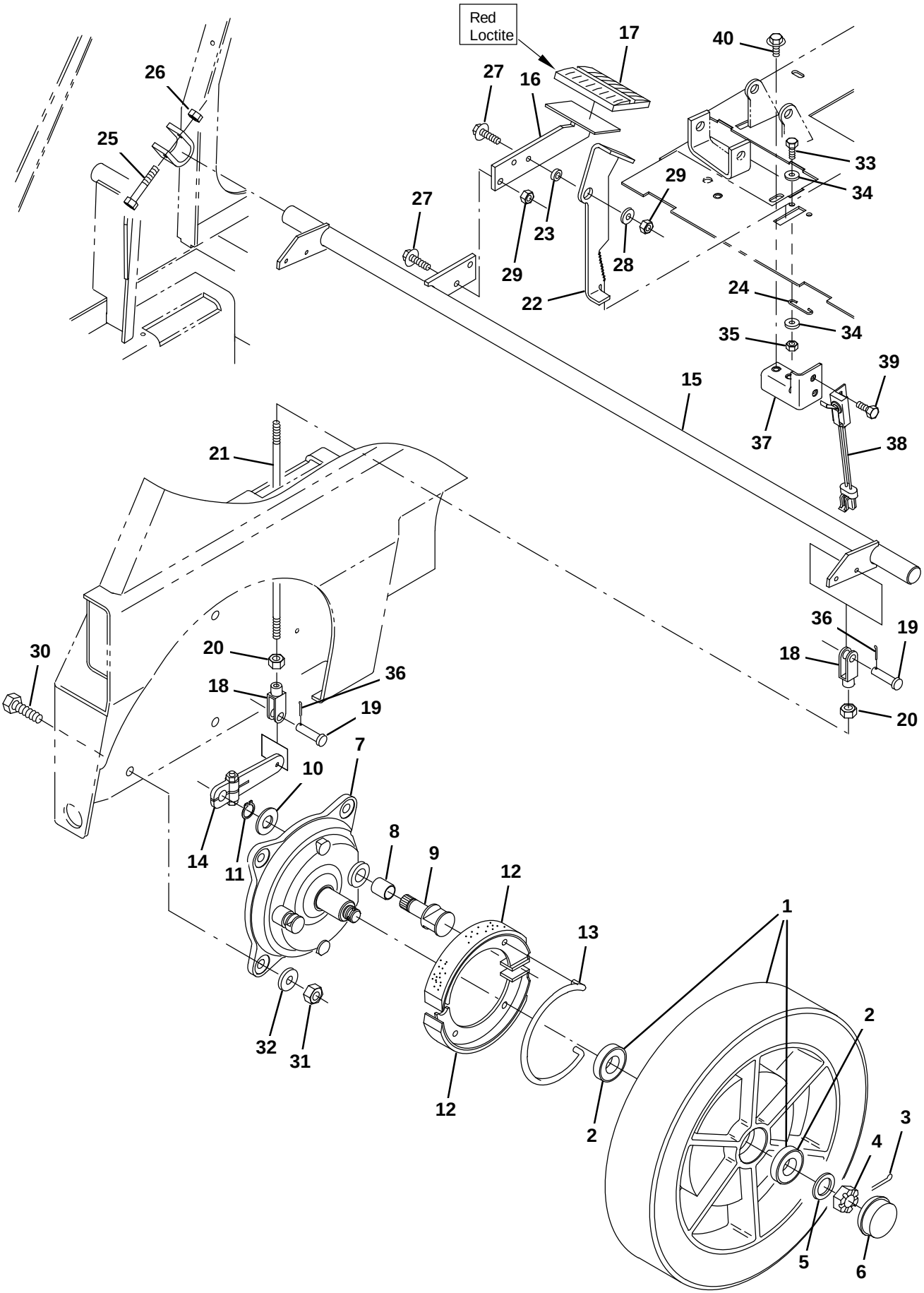

356003 − E

Fig. 12 − Wheel and Brake Group, Front

	Ref.	Part No.	Serial Number	Description	Qty.
▽	1	1063238	(0000−)	Tire Assy, Idler, Swpr, Blk, 16.0x3.5	2
▲	2	360074	(0000−)	Bearing, Ball, 1.18b 2.44d 0.63w	2
	3	08182	(0000−)	Pin, Cotter, .125 X 1.00	2
	4	86659	(0000−)	Nut, Hex, Sltd, .75−16	2
	5	49145	(0000−)	Washer, Flat, 0.76b 1.50d .06, Ss	2
	6	54390	(0000−)	Cap, Hub, Dust, 2.57d 0.77l	2
▽		360023	(0000−)	Brake Assy	2
▲	7	360270	(0000−)	Plate, Backing, Brake	1
▲	8	360271	(0000−)	Bushing, Sleeve, 0.78b 0.86d 0.93l, Bnz	1
▲	9	360272	(0000−)	Cam, Plt, Brake [Nickel]	1
▲	10	360273	(0000−)	Washer, Flat, M21.0b X 37d X 3	1
▲	11	360274	(0000−)	Retainer, Ring, Brake	1
▲	12	360275	(0000−)	Shoe, Brake, 180 X 30mm	2
▲	13	360276	(0000−)	Spring, Wir, 0.25d, Brake Return	1
	14	360802	(0000−)	Arm, Lever, Brake, 4.1 [Knott]	2
	15	1052114	(0000−)	Shaft Wldt, Brush	1
	16	1052113	(0000−)	Pedal Wldt, Brake	1
	17	51109	(0000−)	Pad, Pedal, Brake, 3.96l 2.36w 0.75	1
	18	14595−1	(0000−)	Clevis, Adj, 0.25pin, 0.25−28 Rh, Pl	4
	19	14605	(0000−)	Pin, Clevis, 0.25d X 0.75l	4
	20	32899	(0000−)	Nut, Hex, Jam, .25−28	4
	21	360935	(0000−)	Rod	2
	22	1046553	(0000−)	Lever, Stop, Brake	1
	23	1052263	(0000−)	Tube, 0.34id 0.62od 00.2l, Stl	1
	24	71367	(0000−)	Spring, Wir, 0.08d, Parking Brake	1
	25	06949	(0000−)	Screw, Hex, M6 X 1.00 X 50, 8.8	2
	26	08708	(0000−)	Nut, Hex, Lock, M6 X 1.00, Nl	2
	27	1037355	(0000−)	Screw, Hex, M8 X 1.25 X 35, 9.8, Sems	3
	28	32491	(0000−)	Washer, Flat, 0.31, Std	1
	29	08709	(0000−)	Nut, Hex, Lock, M8 X 1.25, Nl	3
	30	06968	(0000−)	Screw, Hex, M12 X 1.75 X 35, 8.8	8
	31	08711	(0000−)	Nut, Hex, Lock, M12 X 1.75, Nl	8
	32	32486	(0000−)	Washer Flat,0.50,Sae	8
	33	1054875	(0000−)	Screw, Hex, M5 X 1.0 X 16, Blk	2
	34	19066	(0000−)	Washer, Flat, 10	4
	35	06549	(0000−)	Nut, Hex, Lock, M5 X 0.80, Nl	2
	36	08170	(0000−)	Pin, Cotter, .062 X 0.50	2
	37	1048142	(0000−)	Bracket, Switch, Brake	1
	38	1039735	(0000−)	Switch, Snap, 15a No	1
	39	87308	(0000−)	Screw, Hex, M6 X 1.00 X 12, 8.8	2
	40	1020341	(0000−)	Screw, Hex, M8 X 1.25 X 20, Ss, Sems	2

Fig. 13 − Steering Cylinder Group

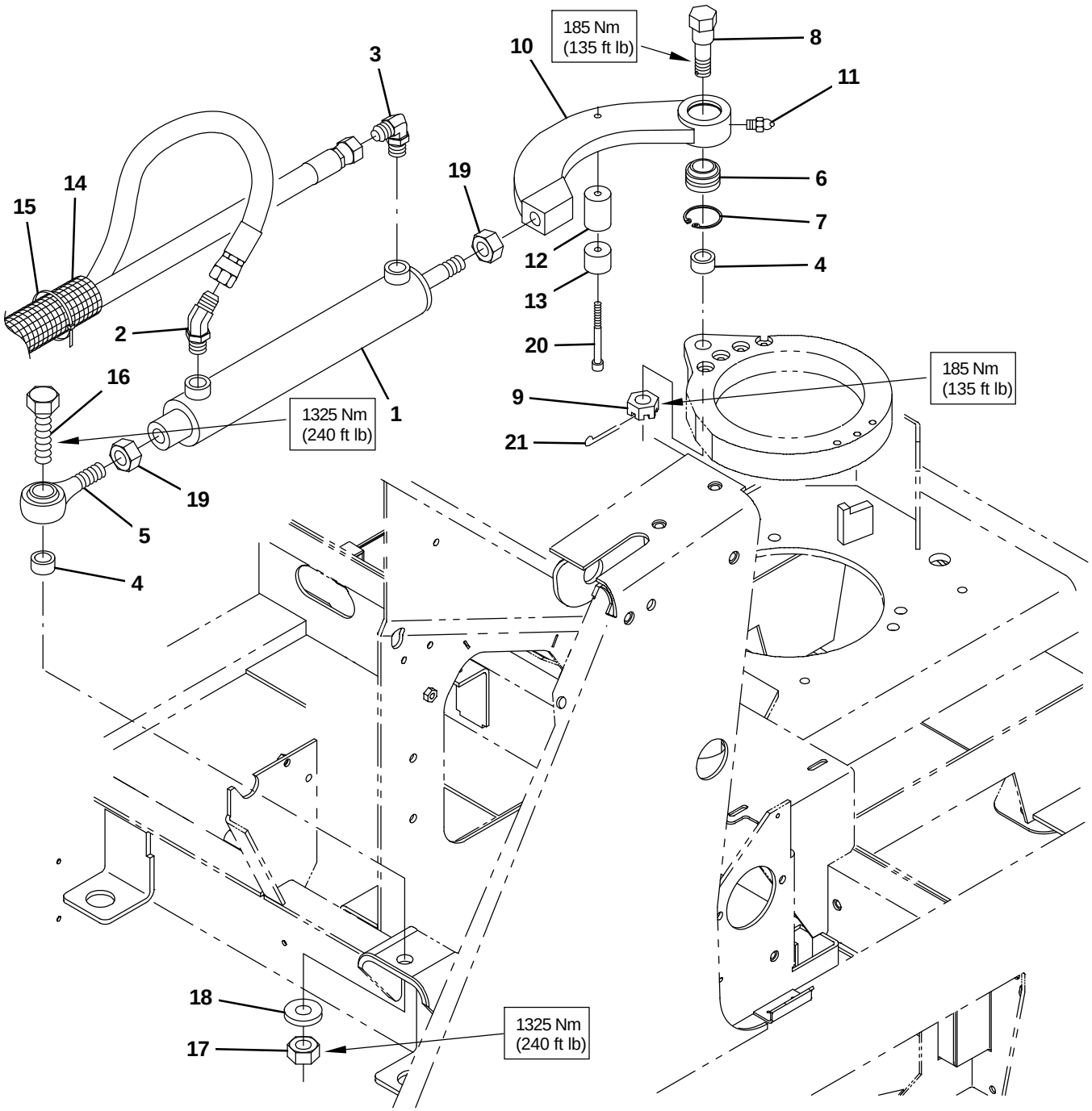

356004− E

Fig. 13 − Steering Cylinder Group

Ref.	Part No.	Serial Number	Description	Qty.
1	1036631	(0000−)	Cylinder, Hyd, 2.0b 19.0l 12.00strk 1500	1
2	47522	(0000−0820)	Fitting, Hyd, E45, Jm06/Om06	1
2	762442	(0821−)	Fitting, Hyd, E45, Fm06/Om06	1
3	56820	(0000−0820)	Fitting, Hyd, E90, Jm06/Om06	1
3	762432	(0821−)	Fitting, Hyd, E90, Fm06/Om06	1
4	69928	(0000−)	Tube, 0.77id 1.13od 00.6l, Stl, Pl	2
5	64886	(0000−)	Rod−End, 0.75−16rh Mal 0.75b [Teflon]	1
6	42120−4	(0000−)	Bearing, Self Align, 1.00b 1.63d	1
7	69925	(0000−)	Ring, Retaining, Int, 1.63d	1
8	69924	(0000−)	Shaft, Pivot, Steering	1
9	39527	(0000−)	Nut, Hex, Sltd, .75−16	1
10	1052560	(0000−)	Arm, Steering	1
11	07259	(0000−)	Fitting, Grease, Str Pm04 .47l	1
12	1052561	(0000−)	Spacer	1
13	69926	(0000−)	Pad, Wear, Pye, 1.25d 1.0l	1
14	82833	(0000−)	Sleeve, Nyl, 1.22id 35.0l	1
15	49263	(0000−)	Tie, Cable, Nyl, 11.4l .19w 3.0 Max D	3
16	58056	(0000−)	Screw, Hex, .75−10 X 3.00, G5	1
17	32987	(0000−)	Nut, Hex, Lock, .75−10, Nl	1
18	39350	(0000−)	Washer, Flat, 0.75, Sae	1
19	43958	(0000−)	Nut, Hex, Std, .75−16	2
20	09037	(0000−)	Screw, Soc, M8 X 1.25 X 70, 12.9	1
21	08175	(0000−)	Pin, Cotter, .125 X 1.25	1

Fig. 14 − Wheel Group, Rear Drive

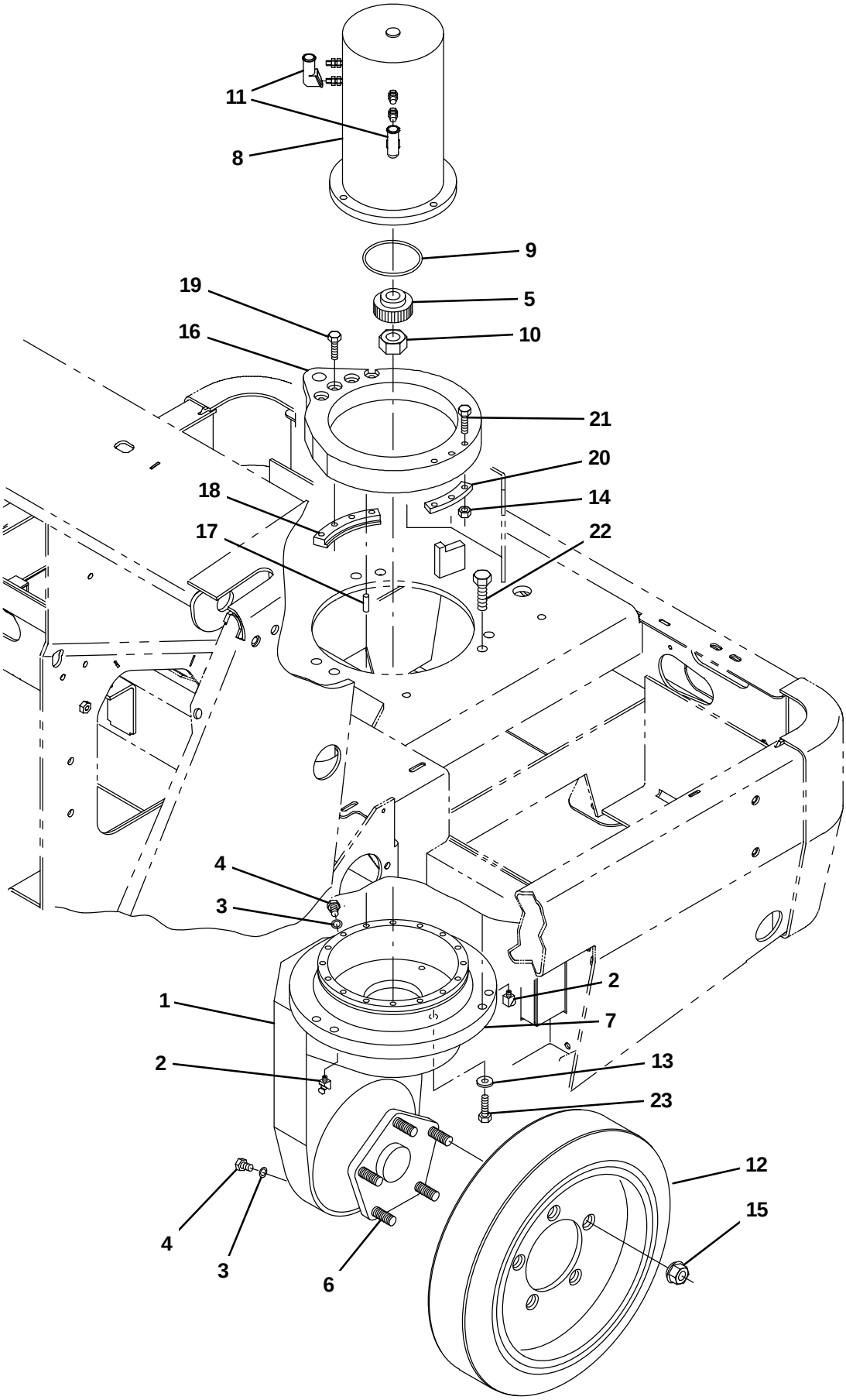

356005 − E

Fig. 14 − Wheel Group, Rear Drive

	Ref.	Part No.	Serial Number	Description	Qty.
▽	1	87355	(0000−)	Gearbox, 90, Drive Wheel, Rear [Hu]	1
▲	2	87839	(0000−)	Fitting, Grease	2
▲	3	87840	(0000−)	Seal, Org	2
▲	4	87841	(0000−)	Plug, Gearbox, Drive Wheel	2
▲	5	87849	(0000−)	Gear, Drive	1
▲	6	12540	(0000−)	Bolt, Gearbox, Drive Wheel	5
▲	7	61791	(0000−)	Housing, Upper, Gearbox, Drive Wheel	1
	8	360065	(0000−)	Motor, Ele, 36vdc 2130rpm 2.10hp (See Breakdown)	1
	9	360980	(0000−)	Seal, Org, .139 X 02.98id	1
	10	360680	(0000−)	Nut, Hex, Lock, M14 X 1.50, Nl	1
	11	02076	(0000−)	Boot, 90deg .50id .57id X .84id 1.0l,Blk	4
	12	1063246	(0000−)	Tire, Drive, Swpr, Blk, 16.0x4.0	1
	12	1063248	(0000−)	Tire, Drive, Swpr, Grey, 16.0x4.0 (Optional non−Marking)	1
	13	32984	(0000−)	Washer, Lock, Int, 0.31	2
	14	08713	(0000−)	Nut, Hex, Lock, M8 X 1.25, Nl, Ss	3
	15	87750	(0000−)	Nut, Wheel, M14−1.5	5
	16	1052562	(0000−)	Ring, Steering	1
	17	87749	(0000−)	Pin, Dowel, 0.3127d X 1.00l	8
	18	55808	(0000−)	Clamp, Steering	1
	19	72040	(0000−)	Screw, Hex, M8 X 1.25 X 45, 10.9	4
	20	1052563	(0000−)	Clamp, Steering	1
	21	39278	(0000−)	Screw, Hex, M8 X 1.25 X 50, 8.8	3
	22	41346	(0000−)	Screw, Hex, M12 X 1.75 X 30, 8.8	6
	23	06958	(0000−)	Screw, Hex, M8 X 1.25 X 80, 8.8	2

Fig. 15 − Brush Lift Group, Main

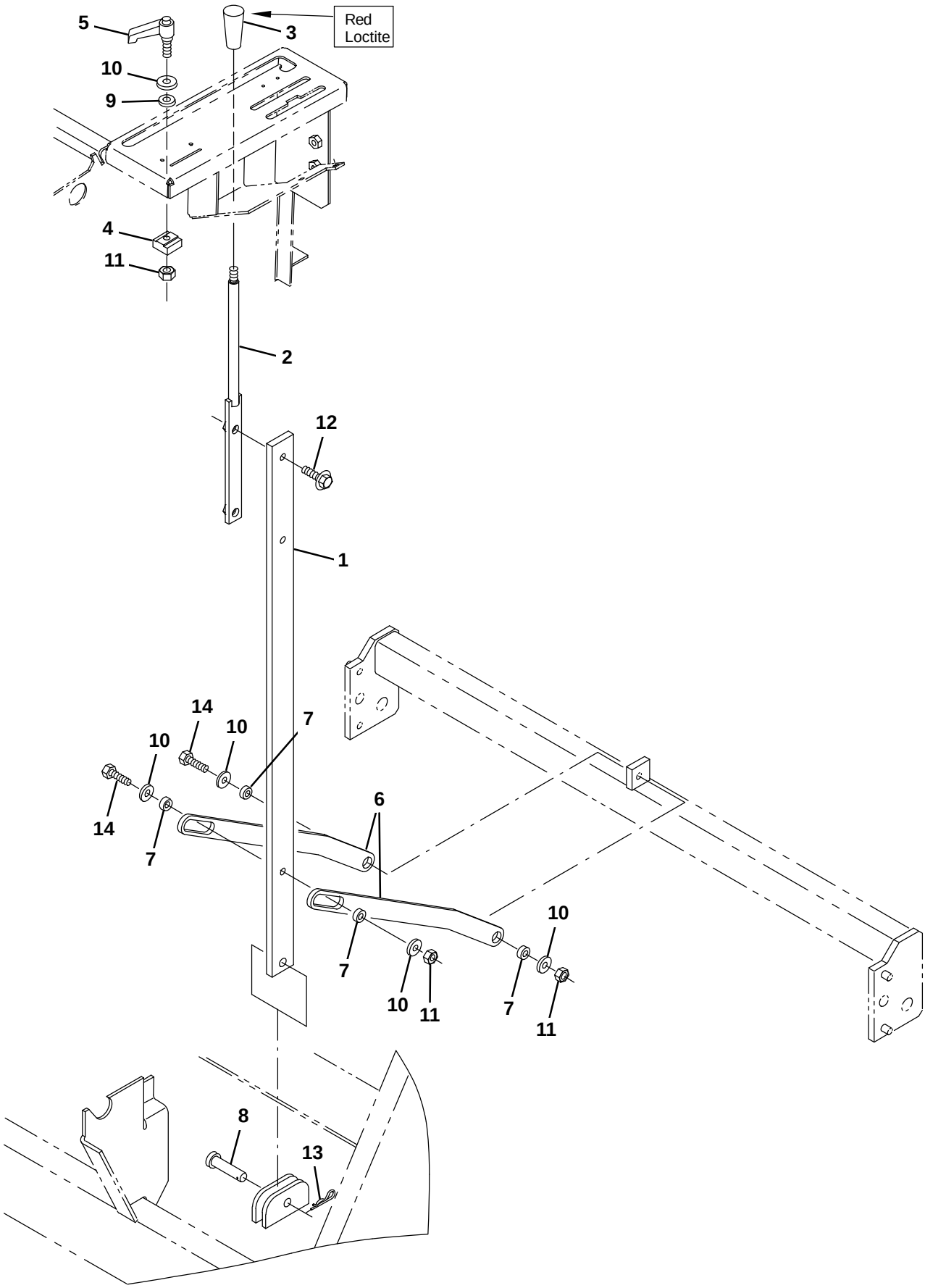

354957 − ALL

Fig. 15 − Brush Lift Group, Main

Ref.	Part No.	Serial Number	Description	Qty.
1	1048801	(0000−)	Lever, Brush Lift	1
2	1055049	(0000−)	Handle Wldt, Lift, Brush	1
3	54995	(0000−)	Knob, 1.12d 3.86l M10 X 1.5, Plstc Tpr]	1
4	360774	(0000−)	Block, Adj	1
5	375020	(0000−)	Lever, Adj, Plstc	1
6	1048802	(0000−)	Link, Lift, Main Brush	2
7	360460	(0000−)	Sleeve, P/M, 0.34b 0.63d 0.4l, Ss / Oil	4
8	51529	(0000−)	Pin, Clevis, 0.50d X 1.25l	1
9	1055074	(0000−)	Washer, Sealing, M8	1
10	32491	(0000−)	Washer, Flat, 0.31, Std	5
11	08709	(0000−)	Nut, Hex, Lock, M8 X 1.25, Nl	3
12	1037354	(0000−)	Screw, Hex, M8 X 1.25 X 30, 9.8, Sems	2
13	44906	(0000−)	Pin, Cotter, Hair, 0.38d .093 Wir	1
14	06956	(0000−)	Screw, Hex, M8 X 1.25 X 45, 8.8	2

Fig. 16 − Brush Cable Lift Group, Main

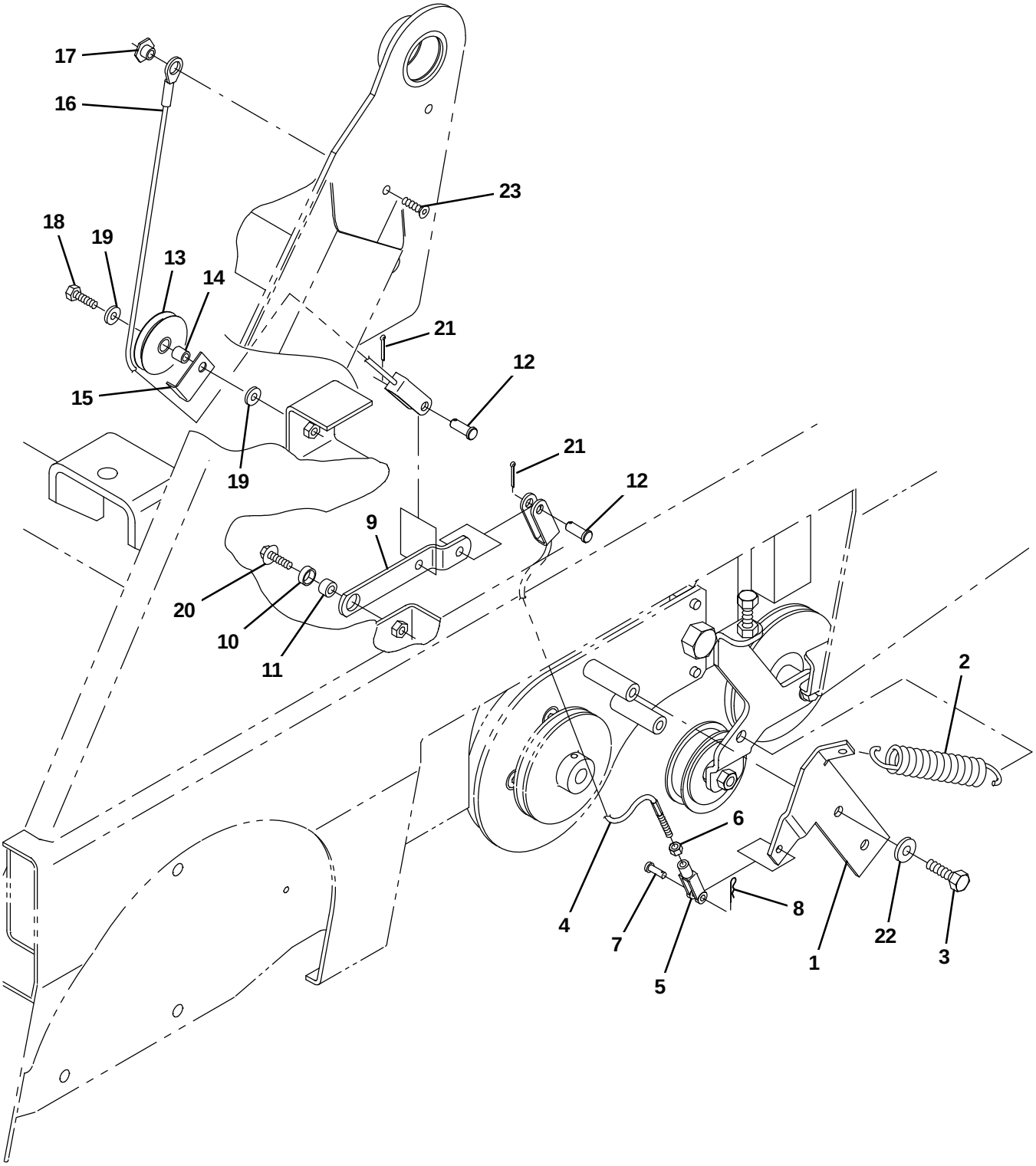

356006− E

Fig. 16 − Brush Cable Lift Group, Main

Ref.	Part No.	Serial Number	Description	Qty.
1	1049220	(0000−)	Bracket, Lift, Brush, Auto	1
2	360488	(0000−)	Spring, Extn	1
3	09291	(0000−)	Screw, Hex, M10 X 1.50 X 20, Ss	2
4	361096	(0000−)	Cable, Glv .13d 010.3l .4clevis /.25−28	1
5	14595−1	(0000−)	Clevis, Adj, 0.25pin, 0.25−28 Rh, Pl	1
6	01714	(0000−)	Nut, Hex, Std, .25−28	1
7	14605	(0000−)	Pin, Clevis, 0.25d X 0.75l	1
8	08085	(0000−)	Pin, Cotter, Hair, 0.31d .058 Wir	1
9	1049224	(0000−)	Plate, Pivot, Lift, Auto	1
10	360491	(0000−)	Bushing, Sleeve, 0.63b 0.72d 0.25l	1
11	360460	(0000−)	Sleeve, P/M, 0.34b 0.63d 0.4l, Ss / Oil	1
12	09088	(0000−)	Pin, Clevis, 0.37d X 1.00l	2
13	360454	(0000−)	Pulley, Cable, 2.5d 0.50b, .22d Cable	1
14	222460	(0000−)	Sleeve, P/M, 0.32b 0.50d 0.5l [430ss]	1
15	360413	(0000−)	Angle, Keeper, Cable	1
16	361097	(0000−)	Cable, Glv .13d 031.0l .4clevis /.55eye	1
17	361114	(0000−)	Spacer	1
18	06955	(0000−)	Screw, Hex, M8 X 1.25 X 35, 8.8	1
19	32491	(0000−)	Washer, Flat, 0.31, Std	2
20	1037354	(0000−)	Screw, Hex, M8 X 1.25 X 30, 9.8, Sems	1
21	39005	(0000−)	Pin, Cotter, .094 X 0.75	2
22	32492	(0000−)	Washer, Flat, 0.38, Std	2
23	360821	(0000−)	Screw, Flt, Soc, M8 X 1.25 X 16, 10.9	1

Fig. 17 − Brush Drive Group, Main

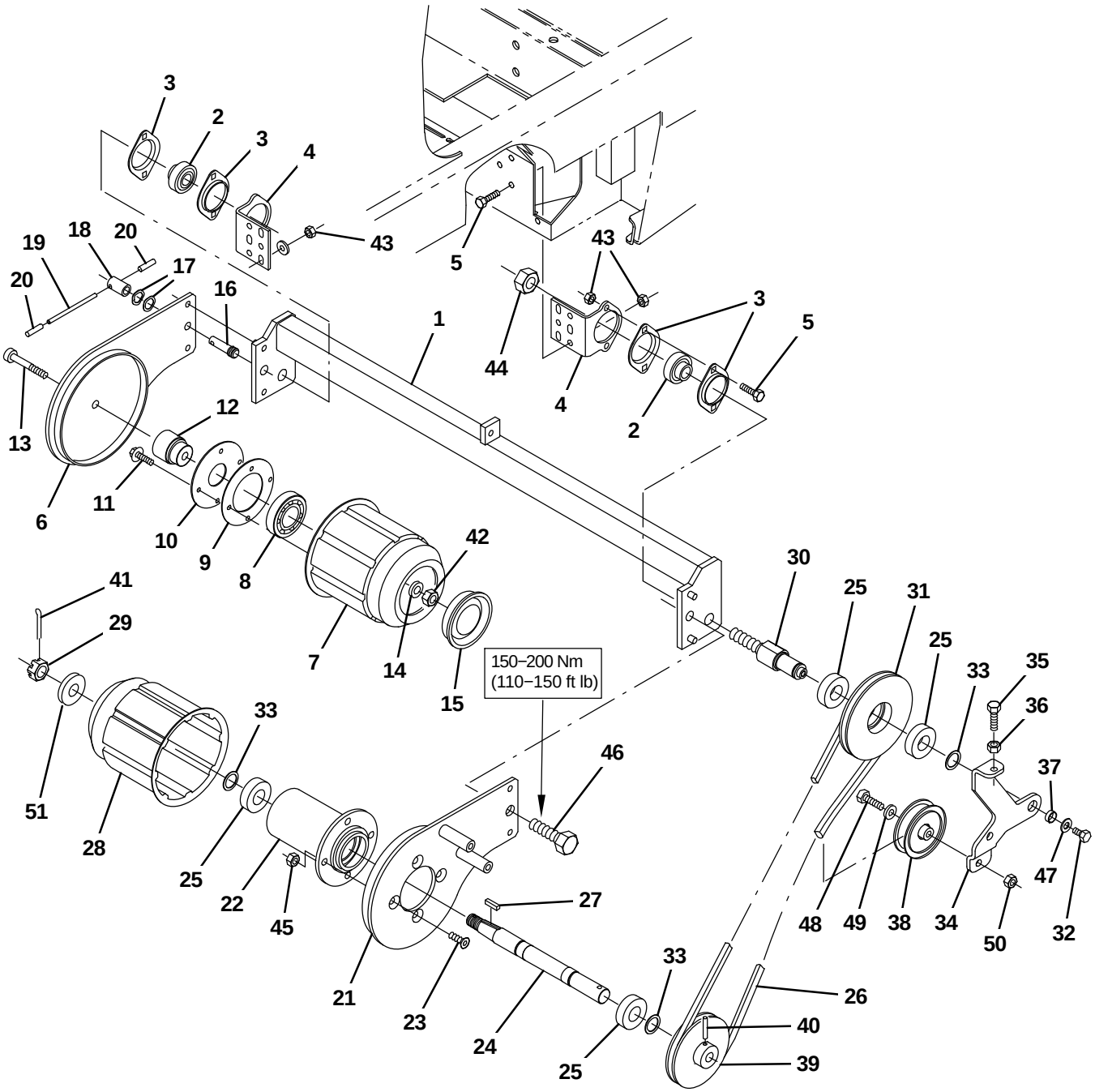

356007− E

Fig. 17 − Brush Drive Group, Main

Ref.	Part No.	Serial Number	Description	Qty.
1	1048800	(0000−)	Tube Wldt, Torque	1
2	25887	(0000−)	Bearing, W/ Collar, 0.75b 1.85d 1.06w	2
3	35973	(0000−)	Flange, Brg, 1.9id 2h	4
4	1048744	(0000−)	Bracket, Angle, Mtg, Brg	2
5	09740	(0000−)	Screw, Hex, M8 X 1.25 X 20, Ss	10
6	1054045	(0000−)	Arm Wldt, Brush, Main, Idler	1
7	55779	(0000−)	Plug Wldt, Idler, Brush	1
8	24899	(0000−)	Bearing, Ball, 1.38b 2.83d 0.67w	1
9	30252	(0000−)	Disc, 0.08, 04.39d 02.56b, 4/.28h 3.8bc	1
10	30253	(0000−)	Disc, 0.06, 04.39d 01.67b, 4/.30h 3.8bc	1
11	1036892	(0000−)	Screw, Hex, M6 X 1.00 X 25, 9.8 Sems	4
12	30251	(0000−)	Shaft, Idler, Plug, Brush	1
13	361555	(0000−)	Screw, Flt, M12 X 1.75 X 80, 10.9	1
14	51564	(0000−)	Washer, Flat, 0.53b 1.75d .12, Stl, Pl	1
15	30255	(0000−)	Cap, Vinyl, 3.28d 0.45l	1
16	360110	(0000−)	Stud, Spcl	1
17	52508	(0000−)	Washer, Wavy, 0.53b 0.81d .09	2
18	360109	(0000−)	Bar, Hex, Stl 0.75, 01.6l .50h Thru	1
19	11631	(0000−)	Pin, Roll, .250d X 3.50l, .250/.256	1
20	360492	(0000−)	Cap, Vinyl, 0.23id, 1.50l	2
21	360108	(0000−)	Arm Wldt, Brush, Main, Drive, Lh	1
22	360104	(0000−)	Housing, Brg, Drive,Brush, 2.5d 2.0b 5.0	1
23	360347	(0000−)	Screw, Flt, Soc, M10 X 1.50 X 25, Ss	4
24	360113	(0000−)	Shaft	1
25	13534	(0000−)	Bearing, Ball, 0.98b 2.05d 0.59w	4
26	360320	(0000−0069)	Belt, V, 31.5l [3v]	1
26	1059569	(0070−)	Belt, V, 31.5l [3v]	1
27	00928	(0000−)	Key, Sq, 0.25 X 0.25, 1.00l	1
28	87631	(0000−)	Plug Wldt, Drive, Brush	1
29	39527	(0000−)	Nut, Hex, Sltd, .75−16	1
30	360116	(0000−)	Shaft, Pivot, Arm, Brush Drive	1
31	1055674	(0000−)	Sheave, 02grv, 05.6/2.9pd 2.0b [3v]	1
32	12273	(0000−)	Screw, Hex, M8 X 1.25 X 20, Nl, Ss	1
33	13766	(0000−)	Ring, Retaining, Ext, 0.98d, Basic	1
34	1049293	(0000−)	Arm, Idler	3
35	06419	(0000−)	Screw, Hex, M10 X 1.50 X 70, Fl, Ss	1
36	07787	(0000−)	Nut, Hex, Std, M10 X 1.50, Ss	1
37	360491	(0000−)	Bushing, Sleeve, 0.63b 0.72d 0.25l	1
38	04186	(0000−)	Sheave, Flat, 3.0d 0.75w 0.67brg	1
39	360115	(0000−)	Sheave, 01grv, 04.7pd 0.97b [3v]	1
40	11398	(0000−)	Pin, Roll, .250d X 2.00l, .250/.256	1
41	08175	(0000−)	Pin, Cotter, .125 X 1.25	4
42	08711	(0000−)	Nut, Hex, Lock, M12 X 1.75, Nl	1
43	08709	(0000−)	Nut, Hex, Lock, M8 X 1.25, Nl	10
44	32987	(0000−)	Nut, Hex, Lock, .75−10, Nl	2
45	41430	(0000−)	Nut, Hex, Lock, M10 X 1.5, Nl	4
46	06977	(0000−)	Screw, Hex, M16 X 2.00 X 20, 8.8	1
47	32491	(0000−)	Washer, Flat, 0.31, Std	4
48	27988	(0000−)	Screw, Hex, .38−16 X 1.50, G5	1
49	32485	(0000−)	Washer, Flat, 0.38, Sae	1
50	36643	(0000−)	Nut, Hex, Lock, .38−16, Nl, Thin	1
51	39350	(0000−)	Washer, Flat, 0.75, Sae	1

Fig. 18 − Brush Drive Motor Group, Main

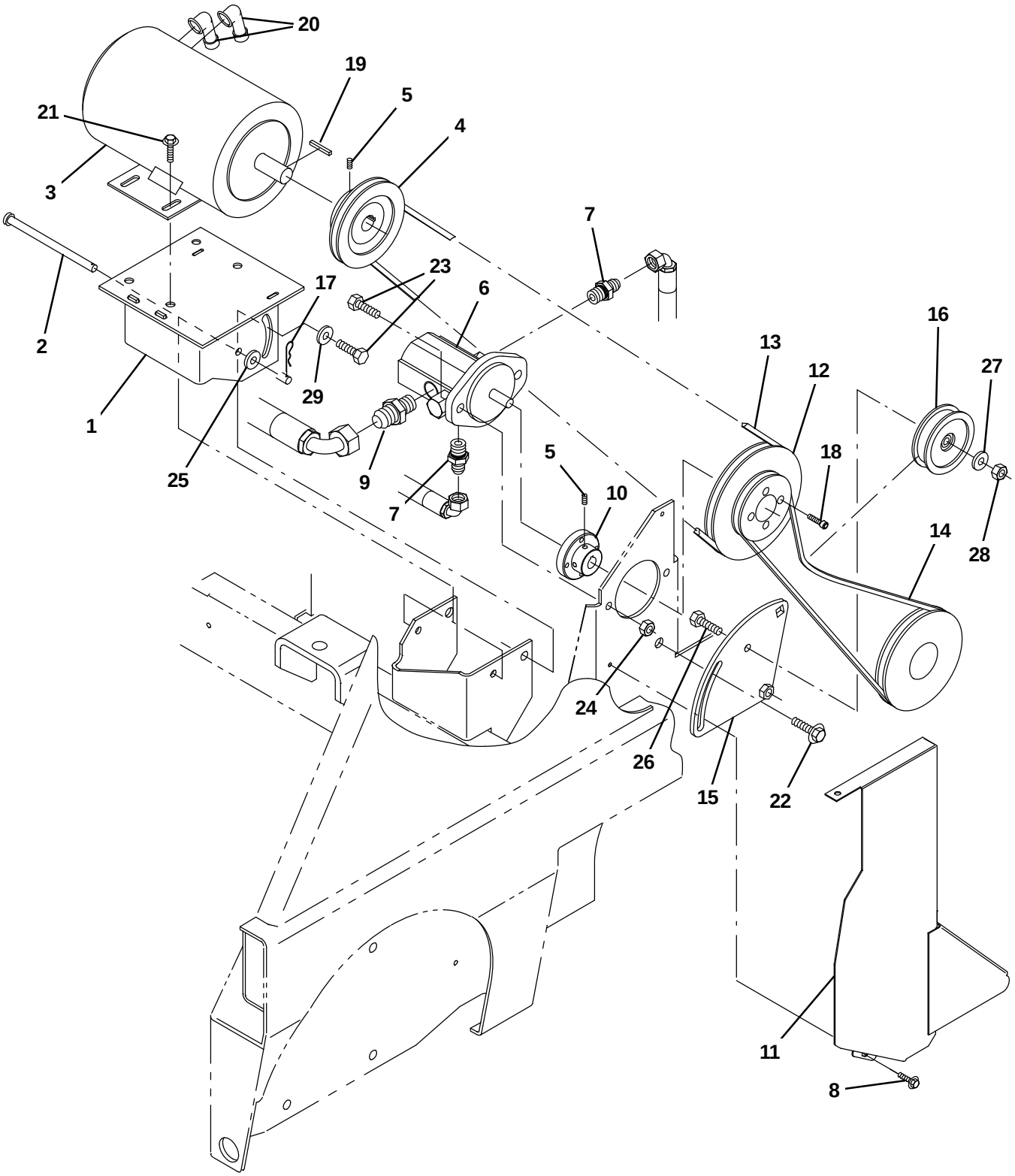

356008− E

Fig. 18 − Brush Drive Motor Group, Main

	Ref.	Part No.	Serial Number	Description	Qty.
	1	1049336	(0000−)	Bracket Wldt, Mtg, Motor	1
	2	49924	(0000−)	Pin, Clevis, 0.37d X 6.12l	1
	3	360175	(0000−)	Motor, Ele, 36vdc 2300rpm 4.00hp (See Breakdown)	1
	4	361191	(0000−)	Sheave, Step [3V/7M.877]	1
	5	57496	(0000−)	Screw, Set, .25−20 X 0.31, Nl	4
▽	6	1054588	(0000−)	Pump, Hyd, Gear, Ext, 2, 00.45 3000, Cw	1
▲		373730	(0000−)	Seal Kit, Pump, Hyd	1
	7	52402	(0000−0820)	Fitting, Hyd, Str, Jm06/Om08	2
	7	762438	(0821−)	Fitting, Hyd, Str, Fm06/Om08	2
	8	74455	(0000−)	Screw, Hex, M6 X 1.00 X 12, Fmg	3
	9	06750	(0000−0820)	Fitting, Hyd, Str, Jm12/Om10	1
	9	1072194	(0821−)	Fitting, Hyd, Str, Fm12/Om10	1
	10	360180	(0000−)	Hub, Guide, End, Actuator	1
	11	9006982	(0000−)	Guard, Belt, Brush Drive, W/ Label, Ce	1
	12	360179	(0000−)	Sheave, 02grv, 06.5/3.7pd 1.50b [3v]	1
	13	360686	(0000−)	Belt, V, 33.5l [3v]	1
	14	03670	(0000−)	Belt, V, 54.0l [3vl]	1
	15	1049302	(0000−)	Plate, Idler, Adjmt	1
	16	02356	(0000−)	Pulley, Idler W/ Bearing, Plstc	1
	17	08085	(0000−)	Pin, Cotter, Hair, 0.31d .058 Wir	1
	18	01682	(0000−)	Screw, Soc, .25−20 X 1.00, Al	4
	19	00915	(0000−)	Key, Sq, 0.19 X 0.19, 1.38l	1
	20	02076	(0000−)	Boot, 90deg .50id .57id X .84id 1.0l,Blk	2
	21	1037354	(0000−)	Screw, Hex, M8 X 1.25 X 30, 9.8, Sems	4
	22	1037358	(0000−)	Screw, Hex, M10 X 1.50 X 35, 9.8, Sems	2
	23	39283	(0000−)	Screw, Hex, M10 X 1.50 X 25, 8.8	6
	24	41430	(0000−)	Nut, Hex, Lock, M10 X 1.5, Nl	2
	25	32492	(0000−)	Washer, Flat, 0.38, Std	1
	26	27990	(0000−)	Screw, Hex, .38−16 X 2.00, G5	1
	27	32485	(0000−)	Washer, Flat, 0.38, Sae	1
	28	50902	(0000−)	Nut, Hex, Lock, .38−16, Nl	1
	29	41187	(0000−)	Washer, Flat, Belleville, .38	2

Fig. 19 − Brush Lift Group, Side

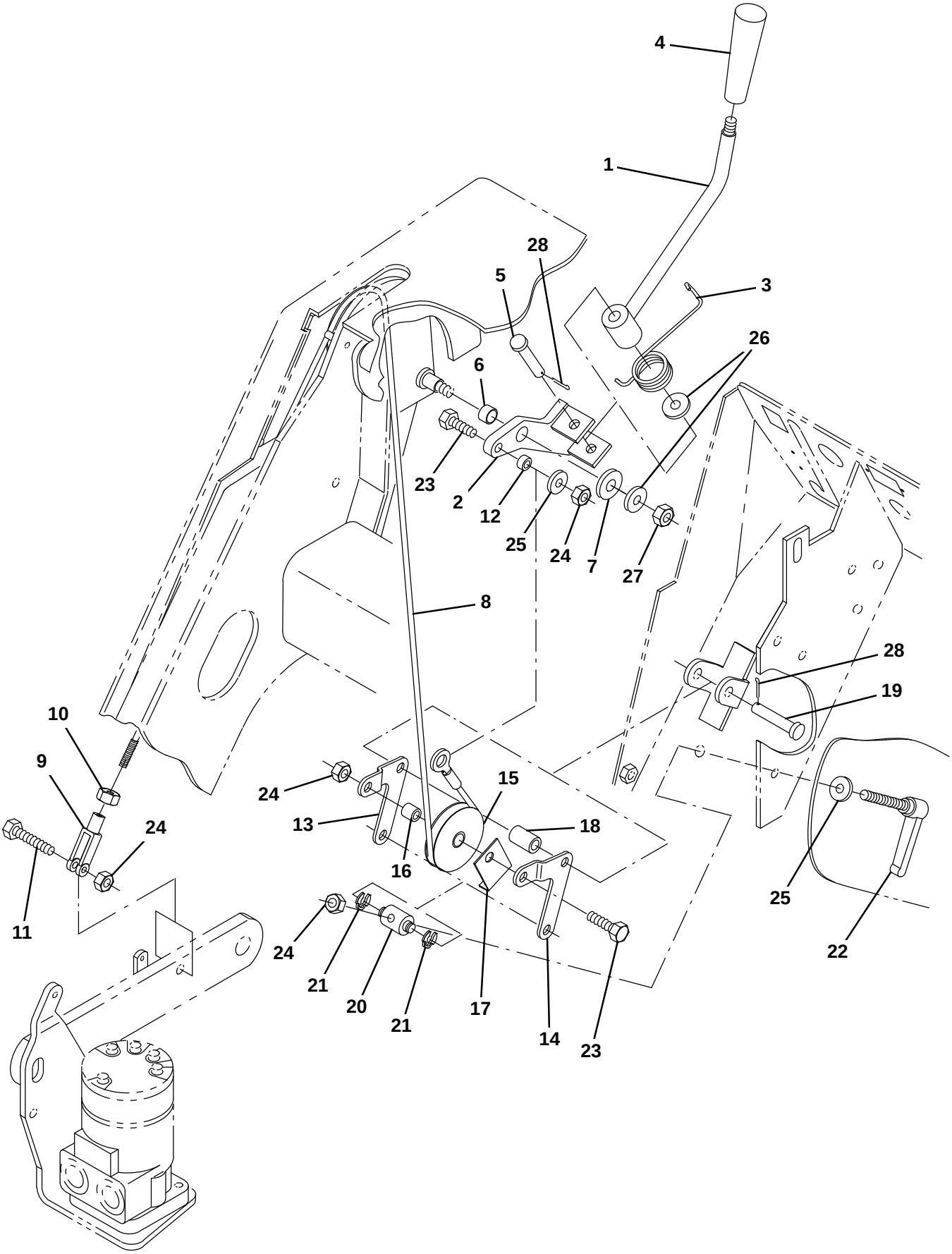

354932 − ALL

Fig. 19 − Brush Lift Group, Side

Ref.	Part No.	Serial Number	Description	Qty.
1	360449	(0000−)	Handle Wldt, Brush, Side	1
2	360417	(0000−)	Arm Wldt, Lift, Brush	1
3	360961	(0000−)	Spring, Tors, 1.03id .11wir 03.0coil	1
4	54995	(0000−)	Knob, 1.12d 3.86l M10 X 1.5, Plstc Tpr]	1
5	51813	(0000−)	Pin, Clevis, 0.37d X 2.12l	1
6	64173	(0000−)	Bushing, Sleeve, 0.50b 0.59d 0.38l, Stl	1
7	39346	(0000−)	Washer, Flat, 0.44, Std	1
8	1047878	(0000−)	Cable, Ss .12d 60.25l .55eye / M6−1.0	1
9	1035826	(0000−)	Clevis, Adj, M6 Pin, M6 X 1.0 Rh, Pl	1
10	41359	(0000−)	Nut, Hex, Std, M6 X 1.00, 8	1
11	06957	(0000−)	Screw, Hex, M8 X 1.25 X 60, 8.8	1
12	360801	(0000−)	Sleeve, 0.32b 0.50d 0.3l, 2cham, Ss	1
13	360410	(0000−)	Bellcrank, Lift, Brush, Side, Rh	1
14	360411	(0000−)	Bellcrank, Lift, Brush, Side, Lh	1
15	369781	(0000−)	Pulley, Cable, 1.5d Nyl	1
16	222460	(0000−)	Sleeve, P/M, 0.32b 0.50d 0.5l [430ss]	1
17	54400	(0000−)	Bracket, Angle, Keeper, Cable	1
18	360451	(0000−)	Tube, 0.42id 0.62od 01.0l, Stl, Pl	1
19	29584	(0000−)	Pin, Clevis, 0.37d X 2.00l	1
20	71126	(0000−)	Block, Adj, Pivot	1
21	12364	(0000−)	Ring, Retaining, Ext, 0.38d, [Klipring]	2
22	360414	(0000−)	Lever, Adj, Metal	1
23	76570	(0000−)	Screw, Hex, M8 X 1.25 X 30, 8.8	2
24	08709	(0000−)	Nut, Hex, Lock, M8 X 1.25, Nl	4
25	32491	(0000−)	Washer, Flat, 0.31, Std	2
26	32492	(0000−)	Washer, Flat, 0.38, Std	2
27	41430	(0000−)	Nut, Hex, Lock, M10 X 1.5, Nl	1
28	44906	(0000−)	Pin, Cotter, Hair, 0.38d .093 Wir	2

Fig. 20 − Brush Motor and Pivot Group, Side

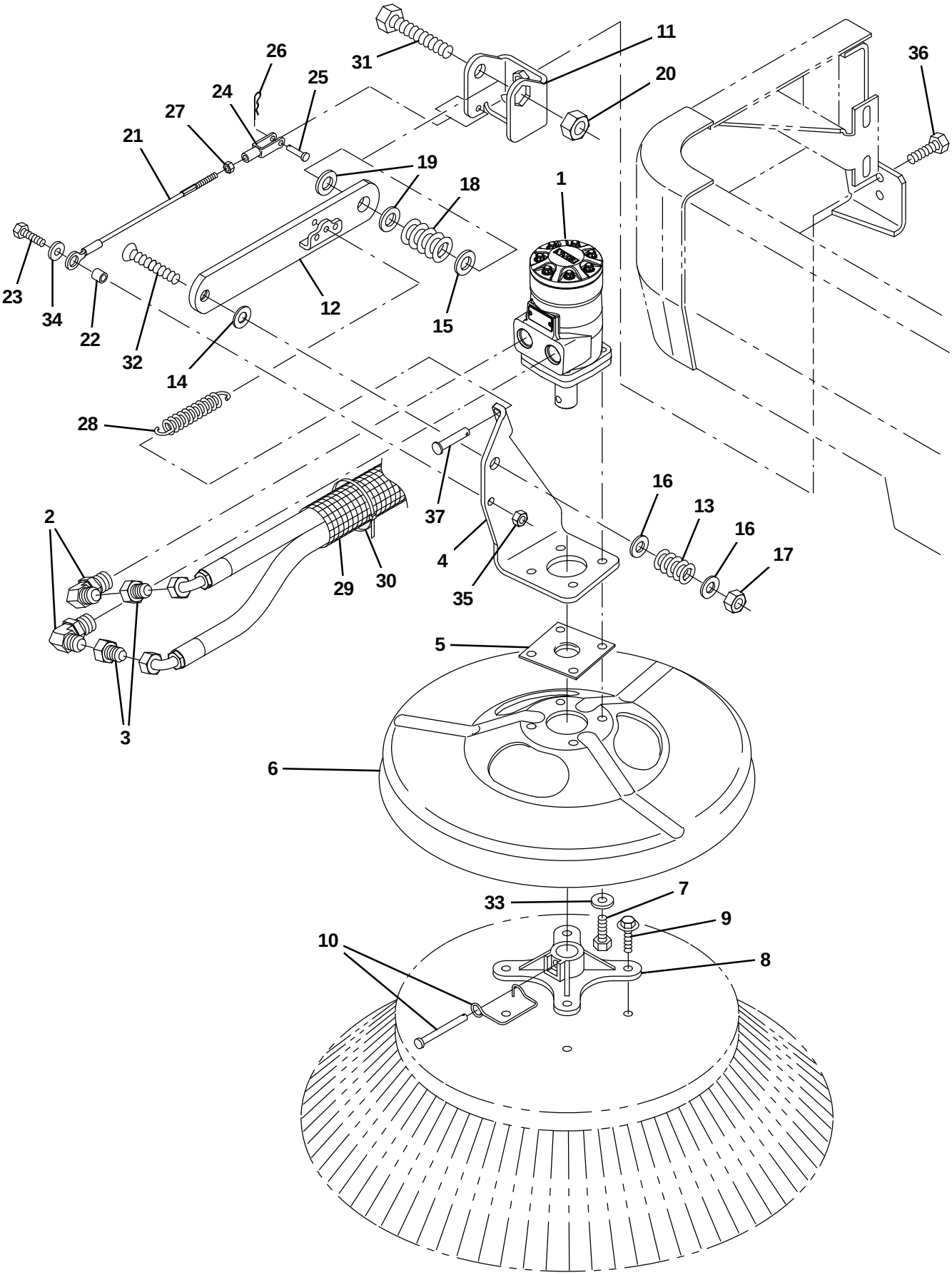

354933 − E

Fig. 20 − Brush Motor and Pivot Group, Side

Ref.	Part No.	Serial Number	Description	Qty.
1	361026	(0000−0534)	Motor, Hyd, Gear, Int 08.9 Bi−Dir 1500 (See Breakdowns)	1
1	1068803	(0535−)	Motor, Hyd, Gear, Int 08.9 Bi−Dir 1500	1
1	361026	(0000−)	Motor, Hyd, Gear, Int 08.9 Bi−Dir 1500 (See Breakdown)	1
2	56821	(0000−)	Fitting, Hyd, E90, Jm08/Om10	2
3	47753	(0000−)	Fitting, Hyd, Str, Jf08/Jm06	2
4	1046246	(0000−)	Bracket, Mtg, Motor, Rh	1
5	16082	(0000−)	Guard, String, Motor, Brush	1
6	1054256	(0000−)	Guard, Brush	1
7	46559	(0000−)	Screw, Hex, .38−16 X 1.25, Nl	4
8	47501	(0000−)	Hub, Adapter, Brush, 1.00b	1
9	39396	(0000−)	Screw, Hex, .31−12 X 1.50, Fmg [Ab]	4
10	84581	(0000−)	Pin Assy, Side Brush W/ Clip	1
11	1037427	(0000−)	Bracket, Arm, Side Brush	1
12	1037485	(0000−)	Arm Wldt, Lift, Rh	1
13	360357	(0000−)	Spring, Dsl, 1.00od 0.50id 1.25l	1
14	59633	(0000−)	Washer, Thrust, 0.53b 1.00d 0.03w[Fbrgl]	1
15	15331	(0000−)	Washer, Flat, 0.62, Sae	1
16	32486	(0000−)	Washer Flat,0.50,Sae	2
17	86029	(0000−)	Nut, Hex, Flexlock, .50−13, Thin	1
18	360081	(0000−)	Spring, Dsl, 1.25od 0.62id 1.80l	1
19	64425	(0000−)	Washer, Thrust, 0.61b 1.25d .06, Fgl	2
20	33342	(0000−)	Nut, Hex, Lock, M16 X 2.00, Nl	1
21	1048311	(0000−)	Cable, Ss .19d 008.5l .55eye / M6−1.0	1
22	360801	(0000−)	Sleeve, 0.32b 0.50d 0.3l, 2cham, Ss	1
23	09010	(0000−)	Screw, Hex, M8 X 1.25 X 25, Ss	1
24	1035826	(0000−)	Clevis, Adj, M6 Pin, M6 X 1.0 Rh, Pl	1
25	14605	(0000−)	Pin, Clevis, 0.25d X 0.75l	1
26	08085	(0000−)	Pin, Cotter, Hair, 0.31d .058 Wir	1
27	07785	(0000−)	Nut, Hex, Std, M6 X 1.00, Ss	1
28	29499	(0000−)	Spring, Extn, 0.75od 0.11wir 04.5l	1
29	31646	(0000−)	Sleeve, Nyl, 1.63id 25.0l	1
30	49266	(0000−)	Tie, Cable, Nyl, 07.3l .19w 1.8 Max D	2
31	06988	(0000−)	Screw, Hex, M16 X 2.00 X 90, 8.8	1
32	27108	(0000−)	Screw, Flt, Soc, .50−13 X 2.50, Al	1
33	32492	(0000−)	Washer, Flat, 0.38, Std	4
34	01685	(0000−)	Washer, Flat, 0.38b 0.88d .08, Ss	1
35	08713	(0000−)	Nut, Hex, Lock, M8 X 1.25, Nl, Ss	1
36	09028	(0000−)	Screw, Hex, M10 X 1.50 X 25, Ss	2
37	41305	(0000−)	Pin, Clevis, 0.37d X 0.75l	1

Fig. 21 − Vacuum Fan Control Group

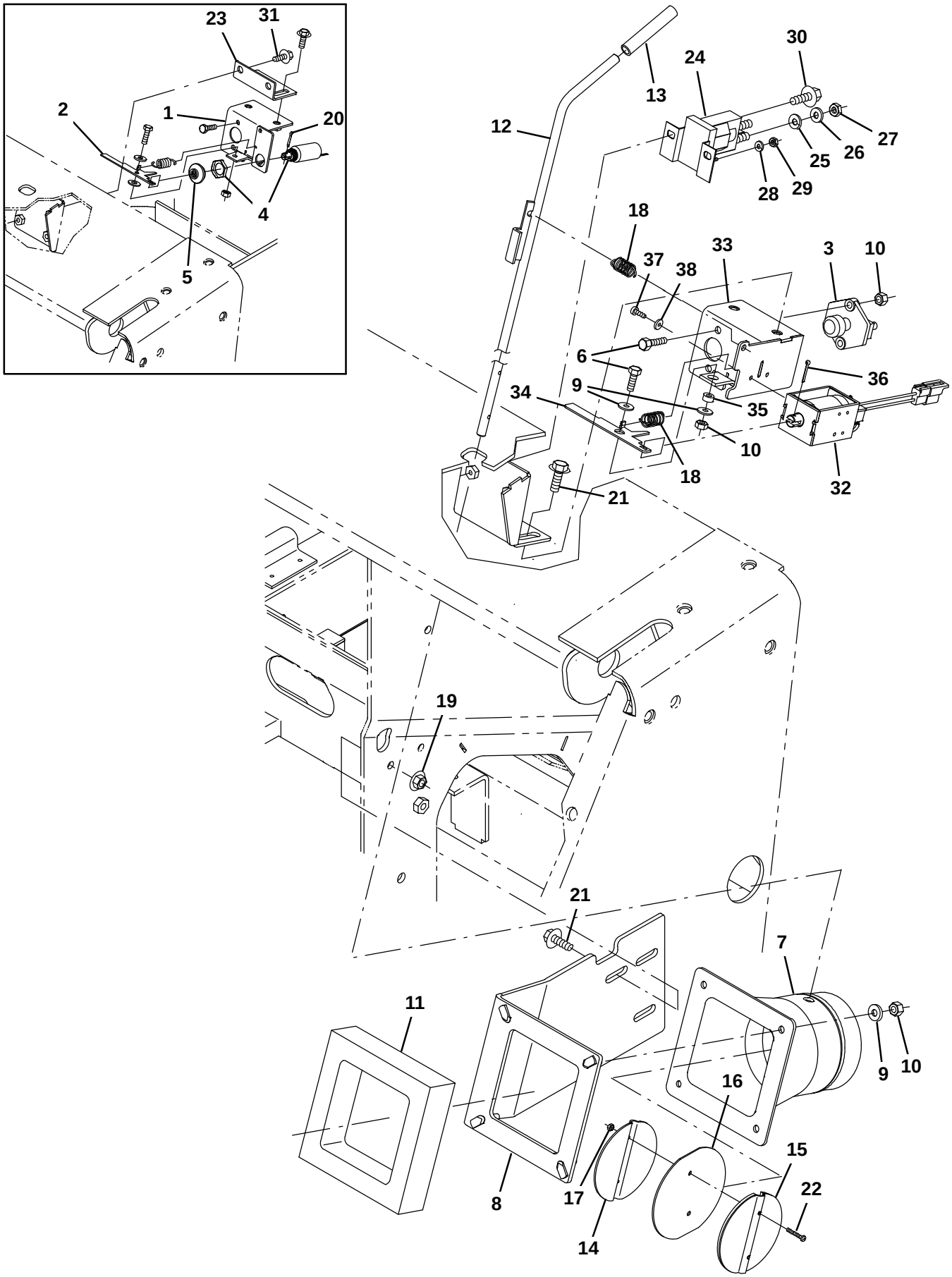

356009− E

Fig. 21 − Vacuum Fan Control Group

Ref.	Part No.	Serial Number	Description	Qty.
1	1057734	(0000−0145)	Bracket, Switch, Shaker	1
2	375019	(0000−0145)	Lever, Vacfan	1
3	44078	(0000−)	Switch, Push, Spst, No	1
4	9007391	(0000−0145)	Solenoid Kit, 36vdc, Replmt [Thrmsentry]	1
5	87707	(0000−0145)	Bellows, Solenoid, .75−16, 1.5l	1
6	06943	(0000−)	Screw, Hex, M6 X 1.00 X 20, 8.8	3
7	1048565	(0000−)	Tube, Transition, Valve, Ev	1
8	1045627	(0000−)	Bracket, Inlet, Vacfan	1
9	32483	(0000−)	Washer, Flat, 0.25, Sae	6
10	08708	(0000−)	Nut, Hex, Lock, M6 X 1.00, Nl	7
11	1044357	(0000−)	Seal, Inlet, Vacuum	1
12	1046590	(0000−)	Rod Wldt, Damper	1
13	360981	(0000−)	Grip, Vyl	1
14	1052653	(0000−)	Plate Wldt, Damper	1
15	1052652	(0000−)	Damper, Inlet	1
16	87983	(0000−)	Seal, Rbr, Damper, 0.06th, 04.1d	1
17	75939	(0000−)	Nut, Hex, Lock, #06−32, Nl	2
18	09087	(0000−)	Spring, Extn, 0.96od 0.05wir 01.4l	2
19	07791	(0000−)	Nut, Hex, Flng, M8 X 1.25	2
20	08346	(0000−0145)	Pin, Cotter, .125 X 0.75	1
21	1037354	(0000−)	Screw, Hex, M8 X 1.25 X 30, 9.8, Sems	7
22	25005	(0000−)	Screw, Pan, Phl, 06−32 X 1.00, G1	2
23	1057735	(0000−0045)	Bracket, Switch, Shaker	1
24	386810	(0000−)	Contactor, 36Vdc, 100A, Sp, No	1
25	32984	(0000−)	Washer, Lock, Int, 0.31	2
26	32490	(0000−)	Washer, Flat, 0.25, Std	2
27	20170	(0000−)	Nut, Hex, Jam, .31−24	2
28	07514	(0000−)	Washer, Lock, Int, 10, Ss	2
29	01713	(0000−)	Nut, Hex, Std, 10−32, 2	2
30	1036892	(0000−)	Screw, Hex, M6 X 1.00 X 25, 9.8, Sems	2
31	1037354	(0000−0045)	Screw, Hex, M8 X 1.25 X 30, 9.8, Sems	2
32	1060444	(0146−)	Solenoid Assy, Pull, 36vdc	1
33	1060334	(0146−)	Bracket Wldt, Switch, Shakr	1
34	1060331	(0146−)	Lever, Vacfan	1
35	140147	(0146−)	Sleeve, P/M, 0.25b 0.44d 0.2l, Pl	1
36	08179	(0146−)	Pin, Cotter, .094 X 1.00	1
37	32515	(0146−)	Screw, Pan, Phl, 08−32 X 0.38, G1	2
38	19065	(0146−)	Washer, Flat, 08	2

Fig. 22 − Vacuum Fan Group

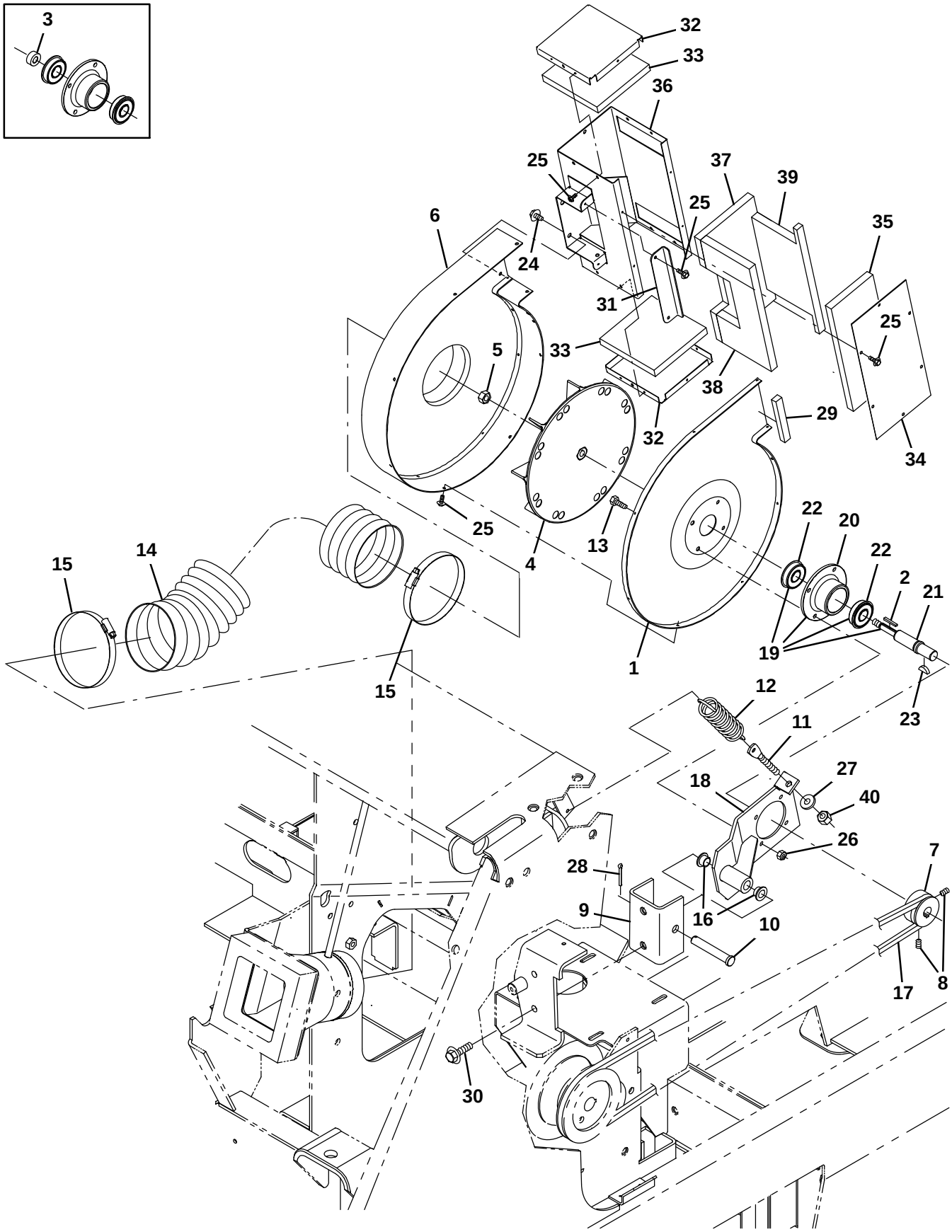

356013 − E

Fig. 22 − Vacuum Fan Group

	Ref.	Part No.	Serial Number	Description	Qty.
	1	1052763	(0000−)	Housing, Fan, Rear, Impeller	1
	2	00954	(0000−)	Key, Sq, 0.12 X 0.12, 1.00l	1
	3	10362	(0000−0164)	Tube, 0.38id 0.81od 00.4l, Stl	1
	4	74454	(0000−)	Impeller, 9.00d X 1.40w X 0.376b	1
	5	87299	(0000−0164)	Nut, Hex, Flexlock, .31−24, Thin	1
	5	71244	(0165−)	Nut, Hex, Flexlock, .38−24	1
	6	1052644	(0000−)	Housing Wldt, Fan	1
	7	360406	(0000−)	Sheave, 01grv, 01.9pd 0.62b [07m]	1
	8	39332	(0000−)	Screw, Set, Soc, .25−20 X 0.75, Al	2
	9	1052646	(0000−)	Channel, .19, 2.8w 2.0 04.0l, 2/ M10	1
	10	23683	(0000−)	Pin, Clevis, 0.50d X 3.00l	1
	11	11843	(0000−)	Bolt, Eye, .38−16 X 3.22, 0.28 Eye	1
	12	33372	(0000−)	Spring, Extn, 1.25od 0.15wir 06.0l	1
	13	06943	(0000−)	Screw, Hex, M6 X 1.00 X 20, 8.8	4
	14	1047637	(0000−)	Hose, Flex, Vacuum, 04.0d, 021.0l	1
	15	23498	(0000−)	Clamp, Hose, Wormdrive, 3.56−4.50d, .50w	2
	16	360917	(0000−)	Bushing, Flng, 0.50b 0.59d 0.38l	2
	17	360753	(0000−)	Belt, V, 32.2l [07m]	1
	18	1052647	(0000−)	Bracket Wldt, Mtg, Fan	1
▽	19	387387	(0000−)	Shaft Assy, Brg	1
▲	20	41561	(0000−)	Housing, Flng, Brg	1
▲	21	387376	(0000−)	Shaft, Impeller	1
▲	22	32525	(0000−)	Bearing, Ball, 0.67b 1.57d 0.47w	2
	23	00500−10	(0000−)	Key, Woodruff, 0.19 0.75 [Asa0606]	1
	24	74455	(0000−)	Screw, Hex, M6 X 1.00 X 12, Fmg	2
	25	87838	(0000−)	Screw, Hex, 06−20 X 0.50, Fmg/Ab, Pl	27
	26	08708	(0000−)	Nut, Hex, Lock, M6 X 1.00, Nl	4
	27	32492	(0000−)	Washer, Flat, 0.38, Std	1
	28	08175	(0000−)	Pin, Cotter, .125 X 1.25	1
	29	361327	(0000−)	Seal, Ure, 0.50, 0.75w 04.0l Adh	1
	30	1037358	(0000−)	Screw, Hex, M10 X 1.50 X 35, 9.8, Sems	2
	31	1053393	(0000−)	Angle, Mtg, Muffler, Vacfan	1
	32	1052650	(0000−)	Panel, Muffler, Fan	2
	33	361993	(0000−)	Insulation, Acstc, 0.5, 04.6 X 04.4	2
	34	1052651	(0000−)	Plate, Cover, Muffler	1
	35	361937	(0000−)	Insulation, Acstc, 0.5, 08.6 X 03.6	1
	36	1052649	(0000−)	Muffler Wldt, Fan	1
	37	361995	(0000−)	Insulation, Acstc, 0.5, 08.6 X 04.6 Ntch	1
	38	361936	(0000−)	Insulation, Acstc, 0.5, 08.6 X 04.2 Ntch	1
	39	361994	(0000−)	Insulation, Acstc, 0.5, 08.7 X 04.2 Ntch	1
	40	50902	(0000−)	Nut, Hex, Lock, .38−16, Nl	1

Fig. 23 − Hopper Lift Arms Group

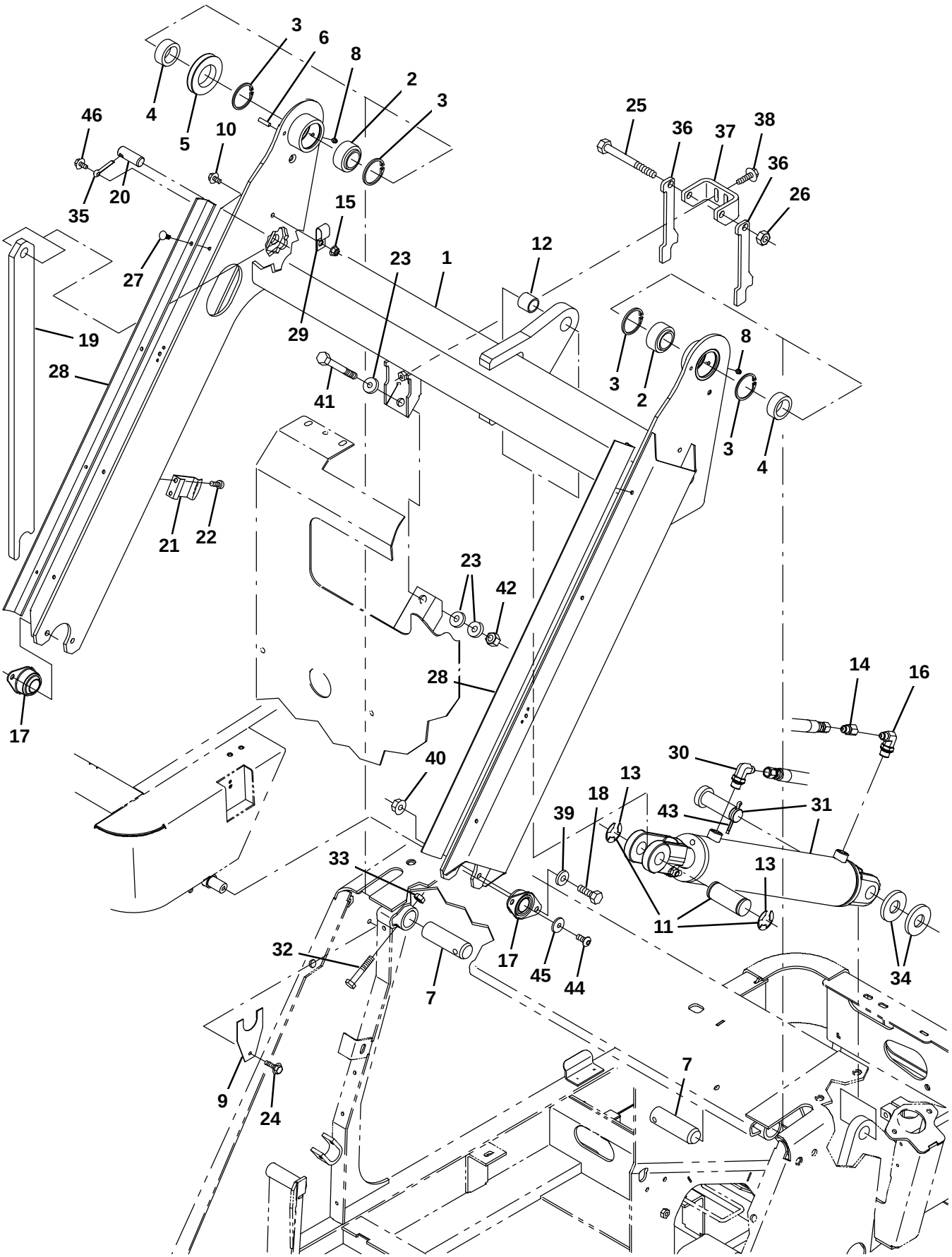

356012 − E

Fig. 23 − Hopper Lift Arms Group

	Ref.	Part No.	Serial Number	Description	Qty.
	1	9006901	(0000−)	Arm, Lift, Hppr, W/ Label, Ce [S20]	1
	2	42120−1	(0000−)	Bearing, Self Align, 1.25b 2.00d	2
	3	59542	(0000−)	Ring, Retaining, Int, 2.00d	4
	4	360455	(0000−)	Sleeve, P/M, 1.25b 1.75d 0.7l [430ss]	2
	5	360077	(0000−)	Pulley, Cable, 3.0d 1.76b, .25d Cable	1
	6	17404	(0000−)	Pin, Roll, .250d X 0.75l, .250/.256	1
	7	360064	(0000−)	Pin, 1.25d 04.0l, 1/.34h, Stl	2
	8	07259	(0000−)	Fitting, Grease, Str Pm04 .47l	2
	9	360768	(0000−)	Plate, Spacer, Lift Arm	8
	10	1020341	(0000−)	Screw, Hex, M8 X 1.25 X 20, Ss, Sems	1
▽	11	361295	(0000−)	Pin Assy, Clevis, Hppr Lift	1
▲	12	35529	(0000−)	Bushing, Sleeve, 1.00b 1.13d 0.99l, Fgl	1
▲	13	23788	(0000−)	Ring, Retaining, Ext, 0.98d, [E−Ring]	2
	14	16455	(0000−0820)	Fitting, Hyd, Rst, Jf04/Jm04, .047	1
	14	1067059	(0821−)	Fitting, Hyd, Rst, Fm04/Of04, .047	1
	15	07791	(0000−)	Nut, Hex, Flng, M8 X 1.25	1
	16	47638	(0000−0820)	Fitting, Hyd, E90, Jm04/Om06	1
	16	762425	(0821−)	Fitting, Hyd, E90, Fm04/Om06	1
	17	87216	(0000−)	Bearing, Flng, 2hole, 1.00b	2
	18	09028	(0000−)	Screw, Hex, M10 X 1.50 X 25, Ss	4
	19	9007373	(0000−)	Arm, Safety, Hppr, W/ Label Ce [S20]	1
	20	360386	(0000−)	Pin, 0.75d 02.0l, 1/.31h, Stl	1
	21	87244	(0000−)	Clip, Spring, Prop Arm	1
	22	48732	(0000−)	Screw, Pan, Phl, M6 X 1.00 X 10, Ss	2
	23	36328	(0000−)	Washer, Flat, Belleville, .50	3
	24	12459	(0000−)	Screw, Hex, M6 X 1.00 X 20, Fmg	2
	25	12138	(0000−)	Screw, Hex, M12 X 1.75 X 120, 8.8	1
	26	08711	(0000−)	Nut, Hex, Lock, M12 X 1.75, Nl	1
	27	21168	(0000−)	Plug, Hole, Rnd, 0.25h 0.8l, Brb, Nyl	8
	28	1053746	(0000−)	Seal, Cover	2
	29	67366	(0000−)	Clamp, Cable, Stl, 1.0x2.0x0.62w, 1hole	1
	30	56820	(0000−0820)	Fitting, Hyd, E90, Jm06/Om06	1
	30	762432	(0821−)	Fitting, Hyd, E90, Fm06/Om06	1
	31	1026362	(0000−1218)	Cylinder, Hyd, 2.5b 24.8l 13.50strk 3000	1
▽	31	1040694	(1219−)	Cylinder, Hyd, 2.5b 24.8l 13.50strk 2500	1
▲		9011418	(1219−)	Seal Kit, Cyl, Hyd [1040694]	1
	32	06957	(0000−)	Screw, Hex, M8 X 1.25 X 60, 8.8	2
	33	08709	(0000−)	Nut, Hex, Lock, M8 X 1.25, Nl	2
	34	32598	(0000−)	Washer, Flat, 1.02b 1.75d .12, Stl	2
	35	08361	(0000−)	Pin, Cotter, .250 X 1.25	1
	36	1052203	(0000−)	Plate, Mtg, Pin	2
	37	1052231	(0000−)	Channel, Mtg, Lock	1
	38	1037355	(0000−)	Screw, Hex, M8 X 1.25 X 35, 9.8, Sems	2
	39	32492	(0000−)	Washer, Flat, 0.38, Std	4
	40	07792	(0000−)	Nut, Hex, Flng, M10 X 1.50	4
	41	34877	(0000−)	Screw, Hex, M10 X 1.50 X 100, 8.8	1
	42	41430	(0000−)	Nut, Hex, Lock, M10 X 1.5, Nl	1
	43	08298	(0000−)	Pin, Cotter, .187 X 1.75	1
	44	17284	(0041−)	Screw, Btn, M8 X 1.25 X 16, Ss	2
	45	30013	(0041−)	Washer, Flat, 0.31, Fendr	2
	46	74455	(0000−)	Screw, Hex, M6 X 1.00 X 12, Fmg	1

Fig. 24 − Hopper Group, Plastic

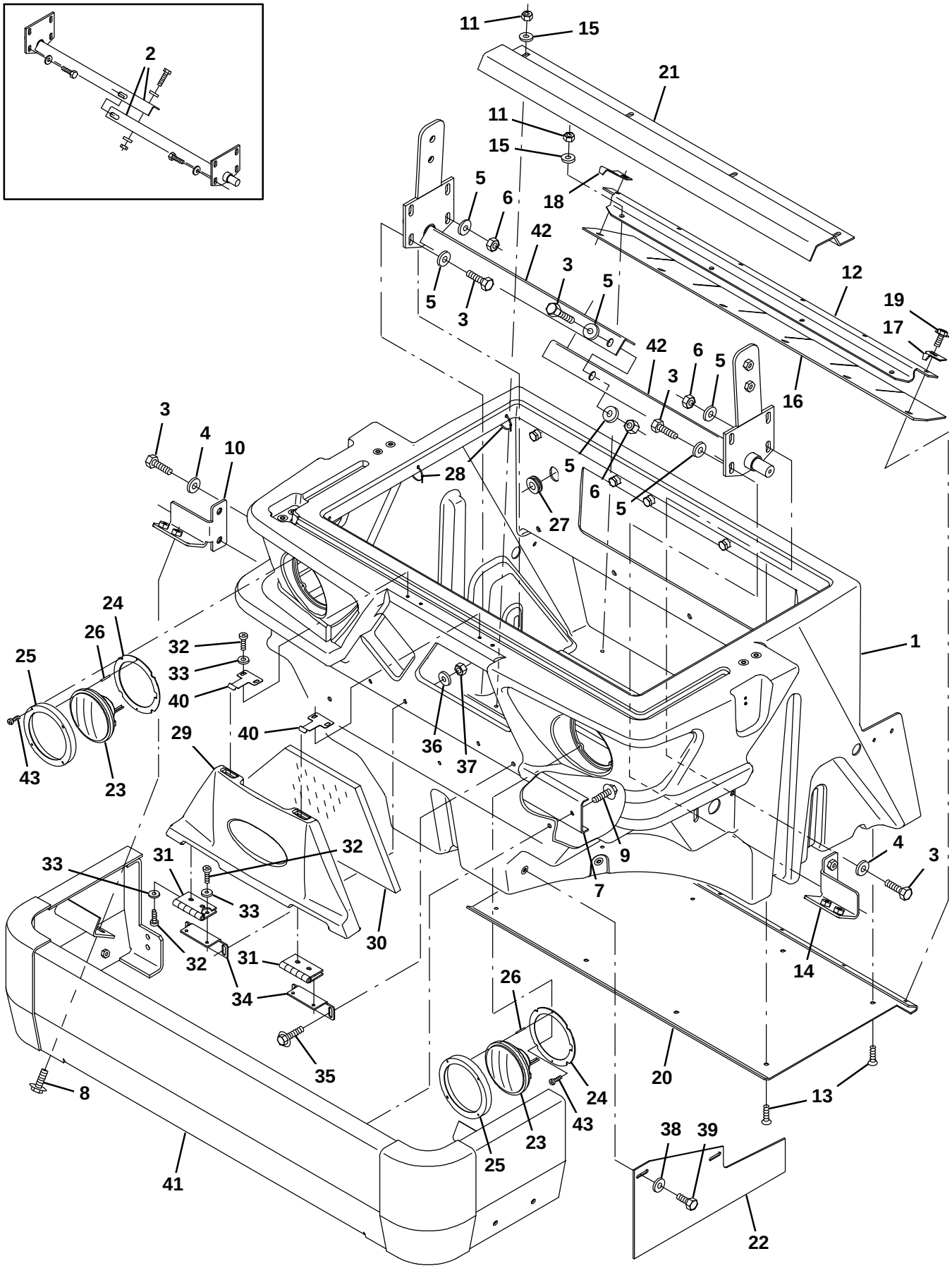

354921− E

Fig. 24 −Hopper Group, Plastic

Ref.	Part No.	Serial Number	Description	Qty.
1	1043490	(0000−)	Hopper [S20]	1
2	1048990	(0000−0040)	Plate Wldt, Pivot	2
3	12317	(0000−)	Screw, Hex, M10 X 1.50 X 30, Ss	10
4	1014563	(0000−)	Washer, Flat, 0.40b 1.12d .12, Ss	4
5	32492	(0000−)	Washer, Flat, 0.38, Std	12
6	41430	(0000−)	Nut, Hex, Lock, M10 X 1.5, Nl	6
7	360602	(0000−)	Plate, Sppt, Bmpr	1
8	1037358	(0000−)	Screw, Hex, M10 X 1.50 X 35, 9.8, Sems	4
9	1037355	(0000−)	Screw, Hex, M8 X 1.25 X 35, 9.8, Sems	4
10	1049253	(0000−)	Bracket, Mtg, Bmpr, Front, Rh	1
11	08708	(0000−)	Nut, Hex, Lock, M6 X 1.00, Nl	8
12	1052452	(0000−)	Strip, Retainer, Hppr Lip	1
13	06415	(0000−)	Screw, Flt, Soc, M6 X 1.00 X 25, 10.9	12
14	1049263	(0000−)	Bracket, Mtg, Bmpr, Front, Lh	1
15	32490	(0000−)	Washer, Flat, 0.25, Std	8
16	360327	(0000−)	Skirt, Neo, .12, 05.20w 36.10l, 06/ Sl	1
17	360893	(0000−)	Deflector, Hppr, Lh	1
18	360894	(0000−)	Deflector, Hppr, Rh	2
19	361339	(0000−)	Screw, Hex, M6 X 1.00 X 16, Fmg	6
20	1052454	(0000−)	Plate, Wear	1
21	1048732	(0000−)	Bracket, Angle, Hppr Bottom Stiffener	1
22	1047575	(0000−)	Skirt, Neo, .12 2ply, Dust−Cntrl	1
23	1048488	(0000−0774)	Headlight , 36v	2
23	1048096	(0000−0774)	Headlight, 36vdc, Led, UL	2
23	1071990	(0775−)	Headlight, 12−48vdc, 10watt, Rnd Led, Ul	2
24	1048116	(0000−)	Plate, Retainer, Headlight	2
25	1049015	(0000−)	Plate, Sppt, Headlight	2
26	46029	(0000−)	Pin, Roll, .094d X 0.87l, .094/.097	8
27	10632−18	(0000−)	Grommet, Rbr, 0.69id, F/1.0h, .25 Matl	1
28	49266	(0000−)	Tie, Cable, Nyl, 07.3l .19w 1.8 Max D	8
29	1044254	(0000−)	Door, Access, Hppr	1
30	1045365	(0000−)	Seal, Door, Access	1
31	1049102	(0000−)	Hinge, .25pin .12 3.0w 03.0l, 4/0.28sl	2
32	09200	(0000−)	Screw, Pan, Phl, M5 X 0.80 X 12, Ss	12
33	19066	(0000−)	Washer, Flat, 10	12
34	1044907	(0000−)	Bracket, Mtg, Hinge	2
35	1037354	(0000−)	Screw, Hex, M8 X 1.25 X 30, 9.8, Sems	4
36	32491	(0000−)	Washer, Flat, 0.31, Std	4
37	08709	(0000−)	Nut, Hex, Lock, M8 X 1.25, Nl	4
38	30013	(0000−)	Washer, Flat, 0.31, Fendr	2
39	49826	(0000−)	Screw, Hex, M8 X 1.25 X 16, Nl, Ss	2
40	1044900	(0000−)	Latch, Door	2
41	1042875	(0000−)	Bumper Wldt, Front	1
42	1058662	(0041−)	Plate Wldt, Pivot	2
43	1053318	(0000−)	Screw, Pan, Phl, 08−16 X 1.00, F/ Plstc	8

Fig. 25 − Hopper Cover Group

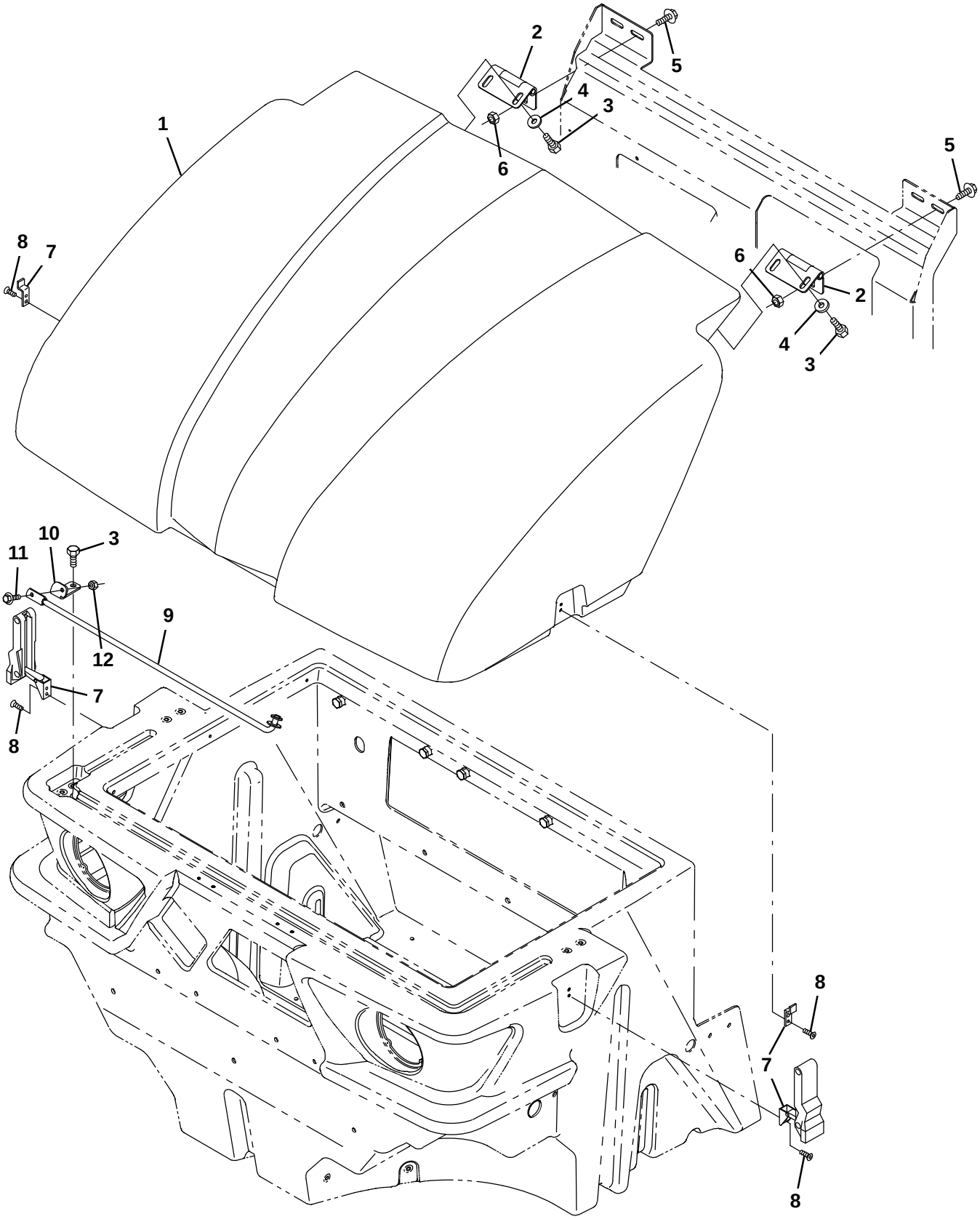

354920 − ALL

Fig. 25 − Hopper Cover Group

Ref.	Part No.	Serial Number	Description	Qty.
1	1043938	(0000−)	Cover, Hppr	1
2	1044214	(0000−)	Hinge, .38pin .12 3.5w 4.0l [Oal]	2
3	16735	(0000−)	Screw, Hex, M8 X 1.25 X 16, 8.8	6
4	32491	(0000−)	Washer, Flat, 0.31, Std	8
5	1037346	(0000−)	Screw, Hex, M8 X 1.25 X 25, 9.8, Sems	4
6	07791	(0000−)	Nut, Hex, Flng, M8 X 1.25	4
7	360824	(0000−)	Latch	2
8	09200	(0000−)	Screw, Pan, Phl, M5 X 0.80 X 12, Ss	8
9	1045434	(0000−)	Rod Wldt, Safety, Hppr Cover	1
10	1045423	(0000−)	Bracket, Rod, Safety	1
11	1036892	(0000−)	Screw, Hex, M6 X 1.00 X 25, 9.8, Sems	1
12	08708	(0000−)	Nut, Hex, Lock, M6 X 1.00, Nl	1

Fig. 26 − Hopper Support Group (0019−)

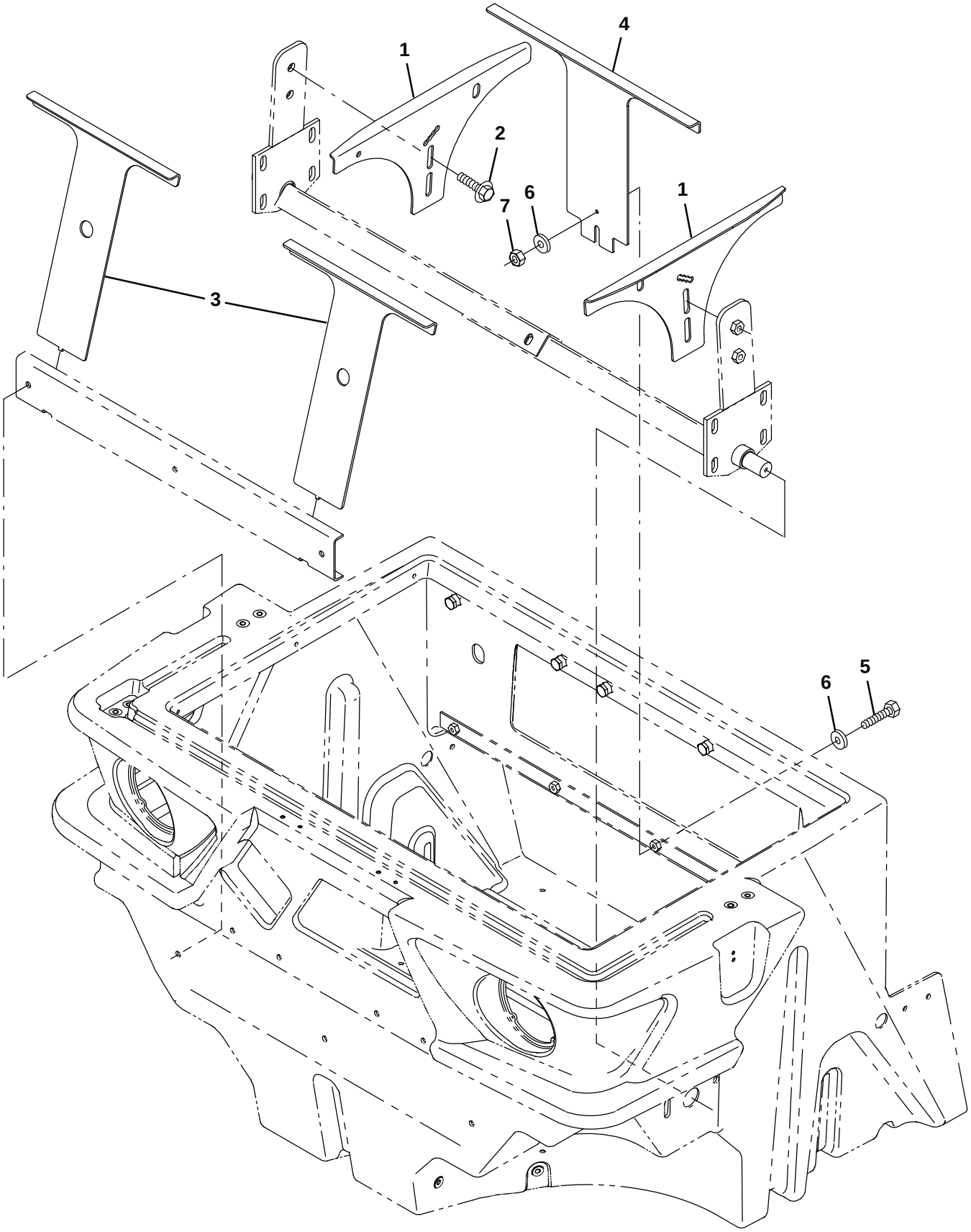

356082 − ALL

Fig. 26 − Hopper Support Group 0019−)

Ref.	Part No.	Serial Number	Description	Qty.
1	1060278	(0019−)	Support, Hppr, Lip, Side	2
2	1037358	(0019−)	Screw, Hex, M10 X 1.50 X 35, 9.8, Sems	4
3	1059119	(0019−)	Support, Hppr, Lip, Front	2
4	1059158	(0019−)	Support, Hppr, Lip, Back	1
5	04375	(0019−)	Screw, Hex, M8 X 1.25 X 40, 8.8, Fl	1
6	32491	(0019−)	Washer, Flat, 0.31, Std	2
7	08709	(0019−)	Nut, Hex, Lock, M8 X 1.25, Nl	1

Fig. 27 − Hopper Dump Door Group

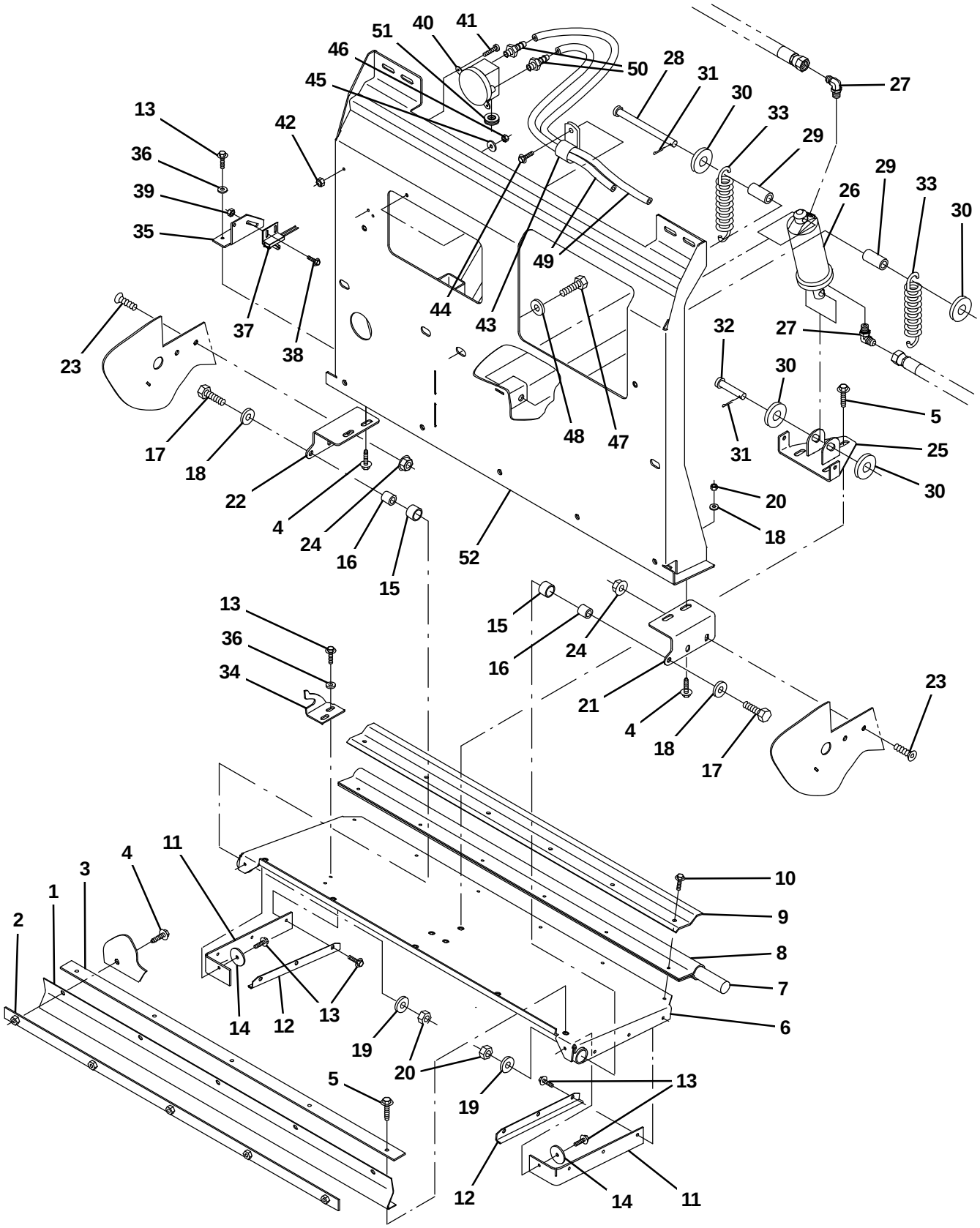

354922− E

Fig. 27 − Hopper Dump Door Group

Ref.	Part No.	Serial Number	Description	Qty.
1	360336	(0000−)	Seal	1
2	1047280	(0000−)	Strip Wldt, Seal, Door	1
3	1051115	(0000−)	Strip, Retainer	1
4	1037354	(0000−)	Screw, Hex, M8 X 1.25 X 30, 9.8, Sems	9
5	1037346	(0000−)	Screw, Hex, M8 X 1.25 X 25, 9.8, Sems	8
6	1051045	(0000−)	Door Wldt, Dump, Hppr	1
7	87689	(0000−)	Cord, Sponge, Neo, 1.0d 36.3l	1
8	360603	(0000−)	Seal, Rbr, .13 6.34w 36.3l, 12/.28h, Red	1
9	1052446	(0000−)	Strip, Retainer, Dump Door	1
10	12459	(0000−)	Screw, Hex, M6 X 1.00 X 20, Fmg	6
11	1055583	(0000−)	Seal, Rbr, Clsd, 0.13, Door, Dump, Side	2
12	360424	(0000−)	Retainer, Seal, Hppr Door, Side	2
13	74455	(0000−)	Screw, Hex, M6 X 1.00 X 12, Fmg	12
14	41178	(0000−)	Washer, Flat, 0.25, Fendr	2
15	64379	(0000−)	Bushing, Sleeve, 0.75b 0.88d 0.75l, Tef	2
16	87104	(0000−)	Tube, 0.38id 0.75od 00.9l, Stl	2
17	09026	(0000−)	Screw, Hex, M8 X 1.25 X 40, Ss	2
18	32491	(0000−)	Washer, Flat, 0.31, Std	6
19	32492	(0000−)	Washer, Flat, 0.38, Std	2
20	08709	(0000−)	Nut, Hex, Lock, M8 X 1.25, Nl	6
21	1050243	(0000−)	Bracket, Angle, Pivot, Door, Dump, Lh	1
22	1050242	(0000−)	Bracket, Angle, Pivot, Door, Dump, Rh	1
23	79246	(0000−)	Screw, Flt, Soc, M8 X 1.25 X 20, 18−8,Ss	4
24	07791	(0000−)	Nut, Hex, Flng, M8 X 1.25	4
25	1051049	(0000−)	Bracket, Mtg, Cyl	1
26	1038176	(0000−)	Cylinder, Hyd, 2.0b 08.0l 04.00strk 2500	1
27	77097	(0000−0820)	Fitting, Hyd, E90, Jm04/Om04	2
27	762427	(0821−)	Fitting, Hyd, E90, Fm04/Om04	2
28	51225−1	(0000−)	Pin, Clevis, 0.50d X 6.00l	1
29	360848	(0000−)	Spacer, 0.56b 0.88d 1.82l, Pl	2
30	32486	(0000−)	Washer Flat,0.50,Sae	4
31	08182	(0000−)	Pin, Cotter, .125 X 1.00	2
32	11211	(0000−)	Pin, Clevis, 0.50d X 2.25l	1
33	360606	(0000−)	Spring, Tens	2
34	1051773	(0000−)	Bracket, Door, Indicator	1
35	1051766	(0000−)	Bracket, Door, Indicator	1
36	32490	(0000−)	Washer, Flat, 0.25, Std	4
37	59965	(0000−)	Switch, Snap, 15a No, Rlr	1
38	09244	(0000−)	Screw, Hex, M5 X 0.80 X 16, 8.8	2
39	06549	(0000−)	Nut, Hex, Lock, M5 X 0.80, Nl	2
40	1052885	(0000−)	Switch, Press, Adj [4−16 In Wtr]	1
41	06927	(0000−)	Screw, Pan, Phl, M4 X 0.70 X 16, 4.8	2
42	02850	(0000−)	Nut, Hex, Lock, M4 X 0.70, Nl	2
43	67767	(0000−)	Clamp, Cable, Stl, 0.69d X 0.62w, 1hole	1
44	1036892	(0000−)	Screw, Hex, M6 X 1.00 X 25, 9.8 Sems	1
45	32490	(0000−)	Washer, Flat, 0.25, Std	1
46	08708	(0000−)	Nut, Hex, Lock, M6 X 1.00, Nl	1
47	15675	(0000−)	Screw, Hex, M8 X 1.25 X 16, Ss	5
48	1014563	(0000−)	Washer, Flat, 0.40b 1.12d .12, Ss	5
49	379719	(0000−)	Hose, Vacuum, 0.16id X 060.0l	1
50	40607	(0000−)	Fitting, Brs, Str, Bm03/Pm02	2
51	10632−4	(0000−)	Grommet, Rbr, 0.62id, F/0.9h, .06 Matl	1
52	1044273	(0000−)	Plate Wldt, Back, Hppr	1

Fig. 28 − Hopper Filter Shaker Group

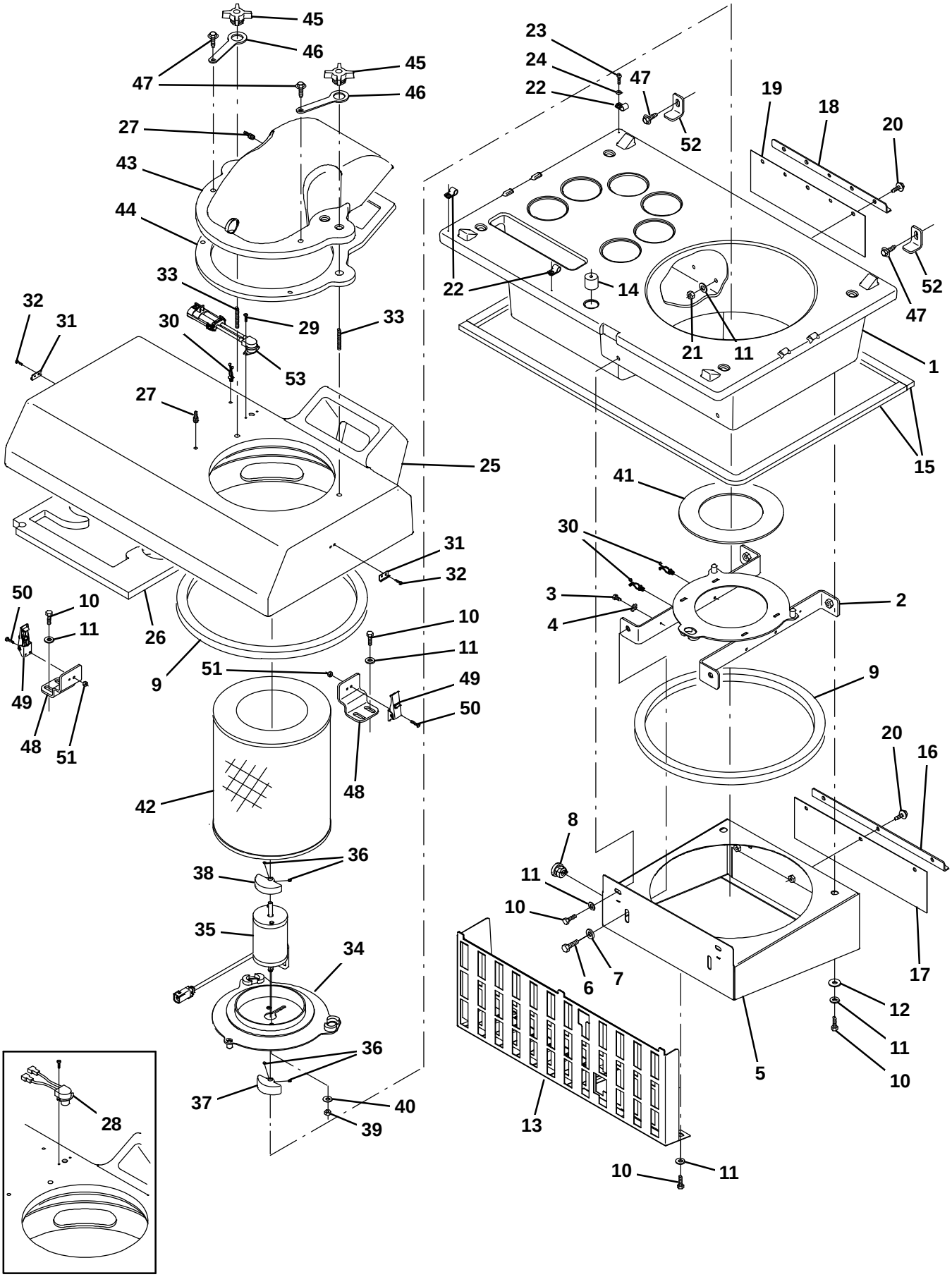

354916 − E, CE

Fig. 28 − Hopper Filter Shaker Group

Ref.	Part No.	Serial Number	Description	Qty.
1	1043815	(0000−)	Tray, Mold	1
2	1044285	(0000−)	Tray, Dust, Shakr	1
3	74455	(0000−)	Screw, Hex, M6 X 1.00 X 12, Fmg	1
4	41140	(0000−)	Washer, Lock, Int−Ext, 0.25	1
5	1043383	(0000−)	Tray Wldt, Dust [Cyclone]	1
6	06961	(0000−)	Screw, Hex, M10 X 1.50 X 20, 8.8	4
7	32492	(0000−)	Washer, Flat, 0.38, Std	6
8	1051199	(0000−)	Strainrelief	1
9	1057960	(0000−)	Gasket, Tray	2
10	16735	(0000−)	Screw, Hex, M8 X 1.25 X 16, 8.8	11
11	32491	(0000−)	Washer, Flat, 0.31, Std	16
12	30013	(0000−)	Washer, Flat, 0.31, Fendr	2
13	1039250	(0000−)	Plate Wldt, Perma−Filter	1
14	1049982	(0000−)	Seal, Foam	1
15	1050106	(0000−)	Gasket, Tray	2
16	1042282	(0000−)	Retainer, Seal, Dust, .12 X 0.8w X 33.6l	1
17	1042285	(0000−)	Seal Assy, Pre−Filter	1
18	1049408	(0000−)	Retainer, Seal, Dust, .12 X 0.8w X 33.6l	1
19	1049409	(0000−)	Seal Assy, Pre−Filter	1
20	1037355	(0000−)	Screw, Hex, M8 X 1.25 X 35, 9.8, Sems	8
21	08709	(0000−)	Nut, Hex, Lock, M8 X 1.25, Nl	5
22	67767	(0000−)	Clamp, Cable, Stl, 0.69d X 0.62w, 1hole	3
23	360943	(0000−)	Screw, Pan, Phl, 10−14 X 0.75, F/ Plstc	1
24	19066	(0000−)	Washer, Flat, 10	1
25	1043817	(0000−)	Cover, Mold	1
26	1057959	(0000−)	Gasket, Tray	1
27	40607	(0000−)	Fitting, Brs, Str, Bm03/Pm02	2
28	1056298	(0000−0158)	Switch, Temp, Sealed, Nc	1
29	763149	(0000−)	Screw, Pan, 06− X 0.38, F/ Plstc	2
30	30406	(0000−)	Clip, Keeper	3
31	384419	(0000−)	Bracket, Latch, Keeper [Southco]	2
32	49697	(0000−)	Screw, Pan, Phl, M4 X 0.70 X 10, Ss	4
33	1049860	(0000−)	Stud, M8 X 1.25 [55.0]	2
34	1044352	(0000−)	Bracket Wldt, Fltr	1
35	1047349	(0000−)	Motor, Ele, 36Vdc 2315Rpm 0.10Hp 08.9A	1
36	39322	(0000−)	Screw, Set, Soc, 10−24 X 0.38, Al	4
37	1053321	(0000−)	Weight, Eccentric, Pntd	1
38	1053291	(0000−)	Weight, Eccentric, Pntd	1
39	86618	(0000−)	Nut, Hex, Lock, #10−32, Nl	2
40	07514	(0000−)	Washer, Lock, Int, 10, Ss	2
41	1044351	(0000−)	Spacer, Fltr	1
42	1045900	(0000−)	Filter, Cyl, 11.09d, 13.31l, 6.724 Id	1
43	1043819	(0000−)	Elbow, Mold	1
44	1044356	(0000−)	Gasket, Cover	1
45	1048335	(0000−)	Knob, Star, 2.75d 4ear 1.1l M8x1.25	2
46	1048353	(0000−)	Strap, Rbr	2
47	1037346	(0000−)	Screw, Hex, M8 X 1.25 X 25, 9.8, Sems	4
48	1044146	(0000−)	Bar, Cover	1
49	384418	(0000−)	Latch, Door [Southco 91−562−07]	2
50	24265	(0000−)	Screw, Pan, Phl, M4 X 0.70 X 16, Ss	4
51	02850	(0000−)	Nut, Hex, Lock, M4 X 0.70, Nl	4
52	1052919	(0000−)	Bracket, Tray	2
55	1061575	(0159−)	Switch, Temp, Sealed, Nc	1

Fig. 29 − Hydraulic Schematic

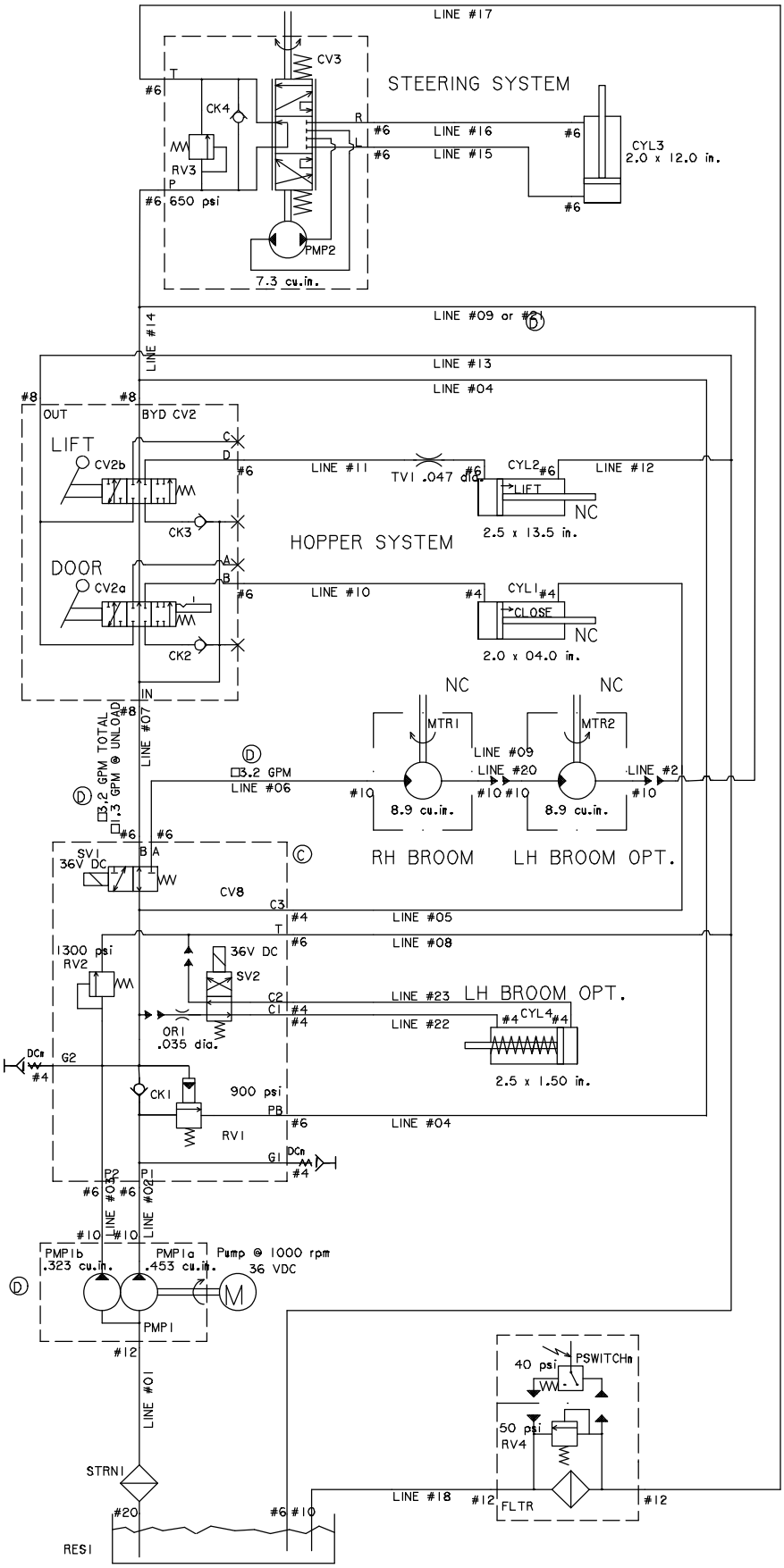

354980 − 1048769

Fig. 30 − Hydraulic Hose Group

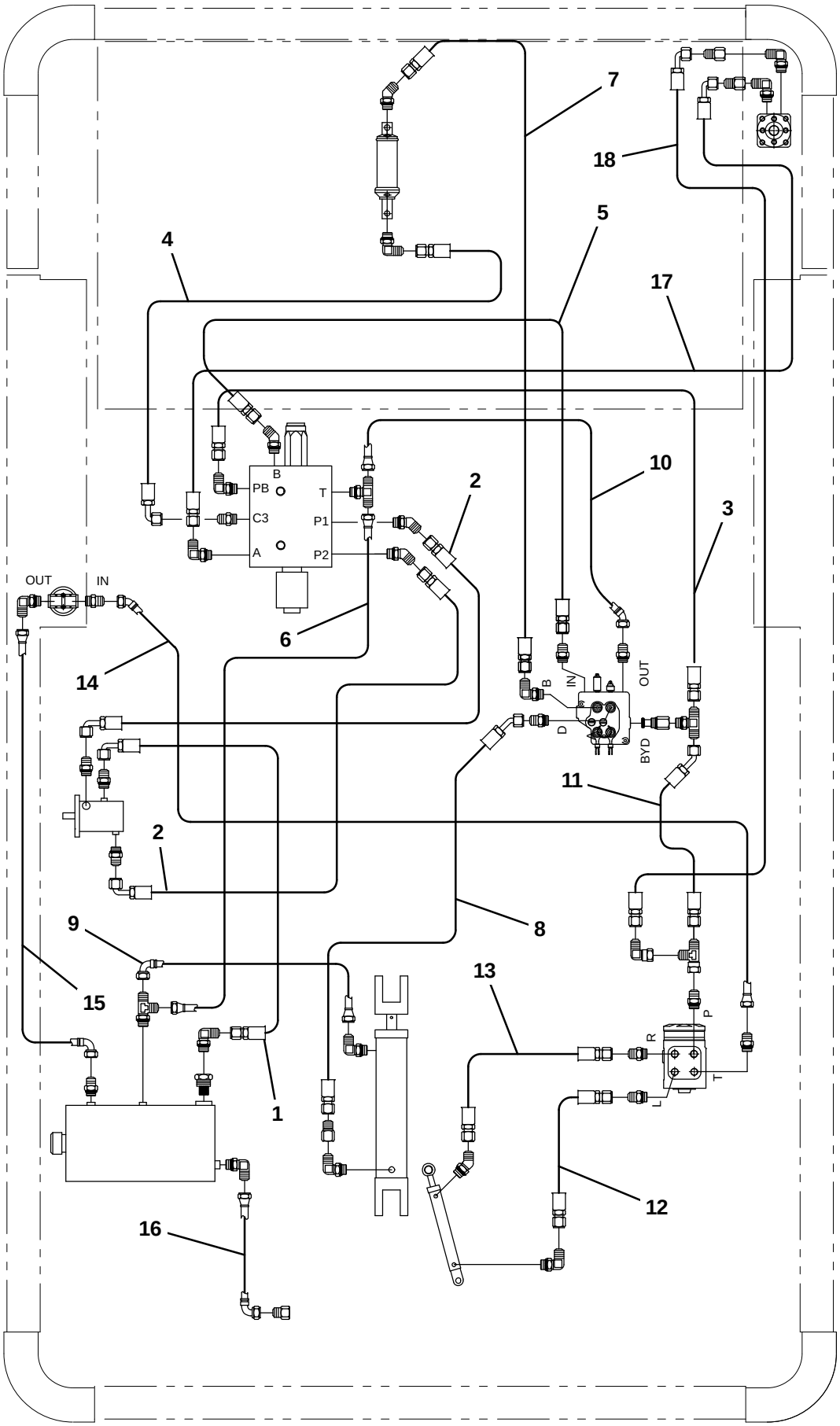

356017− E

Fig. 30 − Hydraulic Hose Group

Ref.	Part No.	Serial Number	Description	Qty.
1	361038	(0000−0820))	Hose, Hyd, Suc12, Jf12e90/Jf12str, 024.0	1
1	1071757	(0821−)	Hose, Hyd, Suc12, Of12e90/Of12str, 024.0	1
2	387282	(0000−0820))	Hose, Hyd, Tc06, Jf06e90/Jf06str, 024.0	2
2	1071758	(0821−)	Hose, Hyd, Tc06, Of06e90/Of06str, 024.0	2
3	361040	(0000−0820))	Hose, Hyd, Tc06, Jf06e90/Jf06str, 034.0	1
3	1071718	(0821−)	Hose, Hyd, Tc06, Of06e90/Of06str, 34.0	1
4	82819	(0000−0820))	Hose, Hyd, Med04, Jf04e90/Jf04str, 088.0	1
4	1071760	(0821−)	Hose, Hyd, Med04, Of04e90/Of04str, 088.0	1
5	1055376	(0000−0820))	Hose, Hyd, Tc06, Jf06str/Jf06str, 020.0	1
5	1071761	(0821−)	Hose, Hyd, Tc06, Of06str/Of06str, 020.0	1
6	76762	(0000−0820))	Hose, Hyd, Low06, Jf06str/Jf06str, 026.0	1
6	1071763	(0821−)	Hose, Hyd, Low06, Of06str/Of06str, 026.0	1
7	1027321	(0000−0820))	Hose, Hyd, Tc04, Jf04str/Jf04e90, 070.0	1
7	1071734	(0821−)	Hose, Hyd, Tc04, Of04str/Of04e90, 070.0	1
8	57972	(0000−0820))	Hose, Hyd, Med04, Jf04e45/Jf04str, 018.0	1
8	1071765	(0821−)	Hose, Hyd, Med04, Of04e45/Of04str, 018.0	1
9	31603	(0000−0820))	Hose, Hyd, Low06, Jf06e90/Jf06str, 052.0	1
9	1071766	(0821−)	Hose, Hyd, Low06, Of06e90/Of06str, 052.0	1
10	361031	(0000−0820))	Hose, Hyd, Low06, Jf06e45/Jf06str, 022.0	1
10	1071767	(0821−)	Hose, Hyd, Low06, Of06e45/Of06str, 022.0	1
11	361045	(0000−0820))	Hose, Hyd, Med06, Jf06e45/Jf06str, 021.0	1
11	1071768	(0821−)	Hose, Hyd, Med06, Of06e45/Of06str, 021.0	1
12	361053	(0000−0820))	Hose, Hyd, Med06, Jf06str/Jf06str, 030.0	1
12	1071769	(0821−)	Hose, Hyd, Med06, Of06str/Of06str, 030.0	1
13	71556	(0000−0820))	Hose, Hyd, Med06, Jf06str/Jf06str, 042.0	1
13	1071770	(0821−)	Hose, Hyd, Med06, Of06str/Of06str, 042.0	1
14	361032	(0000−0820))	Hose, Hyd, Low08, Jf08e45/Jf08str, 024.0	1
14	1071771	(0821−)	Hose, Hyd, Low08, Of08e45/Of08str, 024.0	1
15	71557	(0000−0820))	Hose, Hyd, Low08, Jf08e90/Jf08str, 032.0	1
15	1071772	(0821−)	Hose, Hyd, Low08, Of08e90/Of08str, 032.0	1
16	57974	(0000−0820))	Hose, Hyd, Low08, Jf08e90/Jf08str, 024.0	1
16	1071773	(0821−)	Hose, Hyd, Low08, Of08e90/Of08str, 024.0	1
17	02469	(0000−0820))	Hose, Hyd, Med06, Jf06e90/Jf06str, 100.0	1
17	1071774	(0821−)	Hose, Hyd, Med06, Of06e90/Of06str, 100.0	1
18	31597	(0000−0820))	Hose, Hyd, Med06, Jf06e90/Jf06str, 068.0	1
18	1071776	(0821−)	Hose, Hyd, Med06, Of06e90/Of06str, 068.0	1

Fig. 31 − Hydraulic Reservoir Group

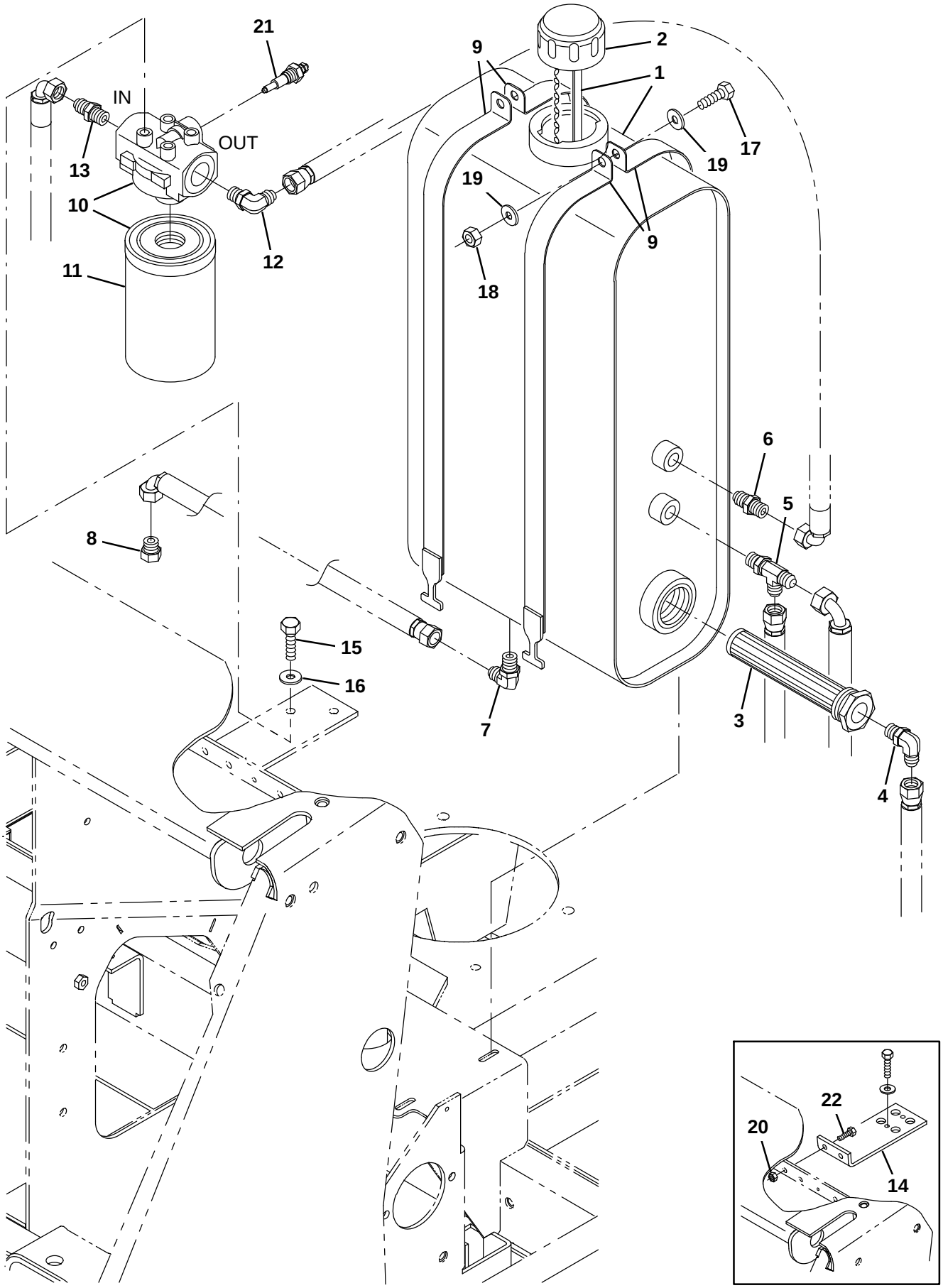

356014 − E

Fig. 31 − Hydraulic Reservoir Group

	Ref.	Part No.	Serial Number	Description	Qty.
▽	1	361271	(0000−)	Reservoir, 02.8gal, W/ Label [6400e]	1
▲	2	360991	(0000−)	Cap, Breather, Hyd, 5.2 Ds	1
▲		70006	(0000−)	Gasket, Cap, Breather, Hyd	1
	3	361023	(0000−)	Strainer, Hyd, 010gpm 100mesh	1
	4	46481	(0000−0820)	Fitting, Hyd, E90, Jm12/Om12	1
	4	762492	(0821−)	Fitting, Hyd, E90, Fm12/Om12	1
	5	76316	(0000−0820)	Fitting, Hyd, Tee, Jm06/Jm06/Om06, Run	1
	5	762434	(0821−)	Fitting, Hyd, Tee, Fm06/Fm06/Om06, Run	1
	6	56692	(0000−0820)	Fitting, Hyd, Str, Jm08/Om10	1
	6	762456	(0821−)	Fitting, Hyd, Str, Fm08/Om10	1
	7	56821	(0000−0820)	Fitting, Hyd, E90, Jm08/Om10	1
	7	767411	(0821−)	Fitting, Hyd, E90, Fm08/Om10	1
	8	16376	(0000−0820)	Fitting, Hyd, Plug, Jm08	1
	8	762448	(0821−)	Fitting, Hyd, Plug, Fm08	1
	9	1051866	(0000−)	Strap Wldt, Tank, Hyd	4
▽	10	10664	(0000−)	Filter Assy, Hyd, 10mic 035gpm, Spin−On	1
▲	11	65221	(0000−)	Element, Fltr, Oil, Spin−On	1
	12	47655	(0000−0820)	Fitting, Hyd, E90, Jm08/Om12	1
	13	42227	(0000−0820)	Fitting, Hyd, Str, Jm08/Om12	1
	14	1051892	(0000−0045)	Bracket, Mtg, Fltr, Hyd	1
	15	34195	(0000−)	Screw, Hex, .38−16 X 1.00, Nl	2
	16	32485	(0000−)	Washer, Flat, 0.38, Sae	2
	17	1037354	(0000−)	Screw, Hex, M8 X 1.25 X 30, 9.8, Sems	2
	18	08709	(0000−)	Nut, Hex, Lock, M8 X 1.25, Nl	2
	19	32490	(0000−)	Washer, Flat, 0.25, Std	4
	20	07791	(0000−0045)	Nut, Hex, Flng, M8 X 1.25	2
	21	361198	(0000−)	Switch Assy, Press, No/Nc 0040Psi	1
	22	1037354	(0000−0045)	Screw, Hex, M8 X 1.25 X 30, 9.8, Sems	2

Fig. 32 − Hydraulic Control Valve Group

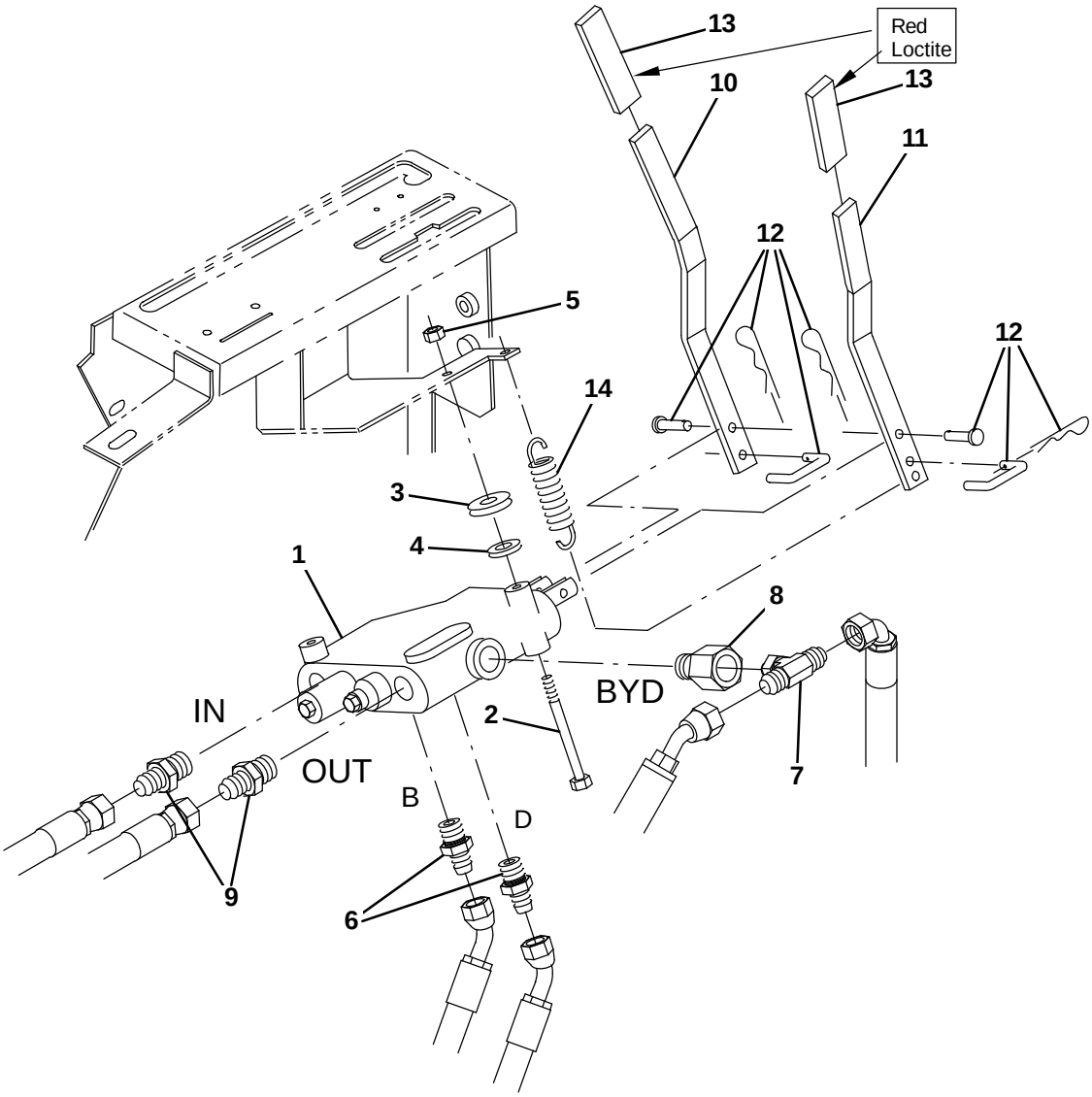

356016−E

Ref.	Part No.	Serial Number	Description	Qty.
1	361012	(0000−)	Valve, Hyd, Mnl, 2spool 0100psi 10gpm (See Breakdown)	1
2	06949	(0000−)	Screw, Hex, M6 X 1.00 X 50, 8.8	2
3	63416	(0000−)	Washer, Flat, 0.31b 0.88d .12, Rbr	2
4	32491	(0000−)	Washer, Flat, 0.31, Std	2
5	08708	(0000−)	Nut, Hex, Lock, M6 X 1.00, Nl	2
6	55685	(0000−0820)	Fitting, Hyd, Str, Jm04/Om06	2
6	762426	(0821−)	Fitting, Hyd, Str, Fm04/Om06	1
7	67683	(0000−0820)	Fitting, Hyd, Tee, Jm06/Jm06/Om06, Br	1
7	762436	(0821−)	Fitting, Hyd, Tee, Fm06/Fm06/Om06, Br	1
8	361028	(0000−)	Plug Assy, Hyd	1
9	52402	(0000−0820)	Fitting, Hyd, Str, Jm06/Om08	2
9	762438	(0821−)	Fitting, Hyd, Str, Fm6/Om08	2
10	360062	(0000−)	Handle, Cntrl, Valve	1
11	360063	(0000−)	Handle, Cntrl, Valve	1
12	361299	(0000−)	Link Assy, Valve Handle	1
13	360467	(0000−)	Grip, Vyl	2
14	59870	(0000−)	Spring, Extn, 0.38od 0.05wir 02.5l	1

Fig. 33 − Hydraulic Solenoid Valve Group

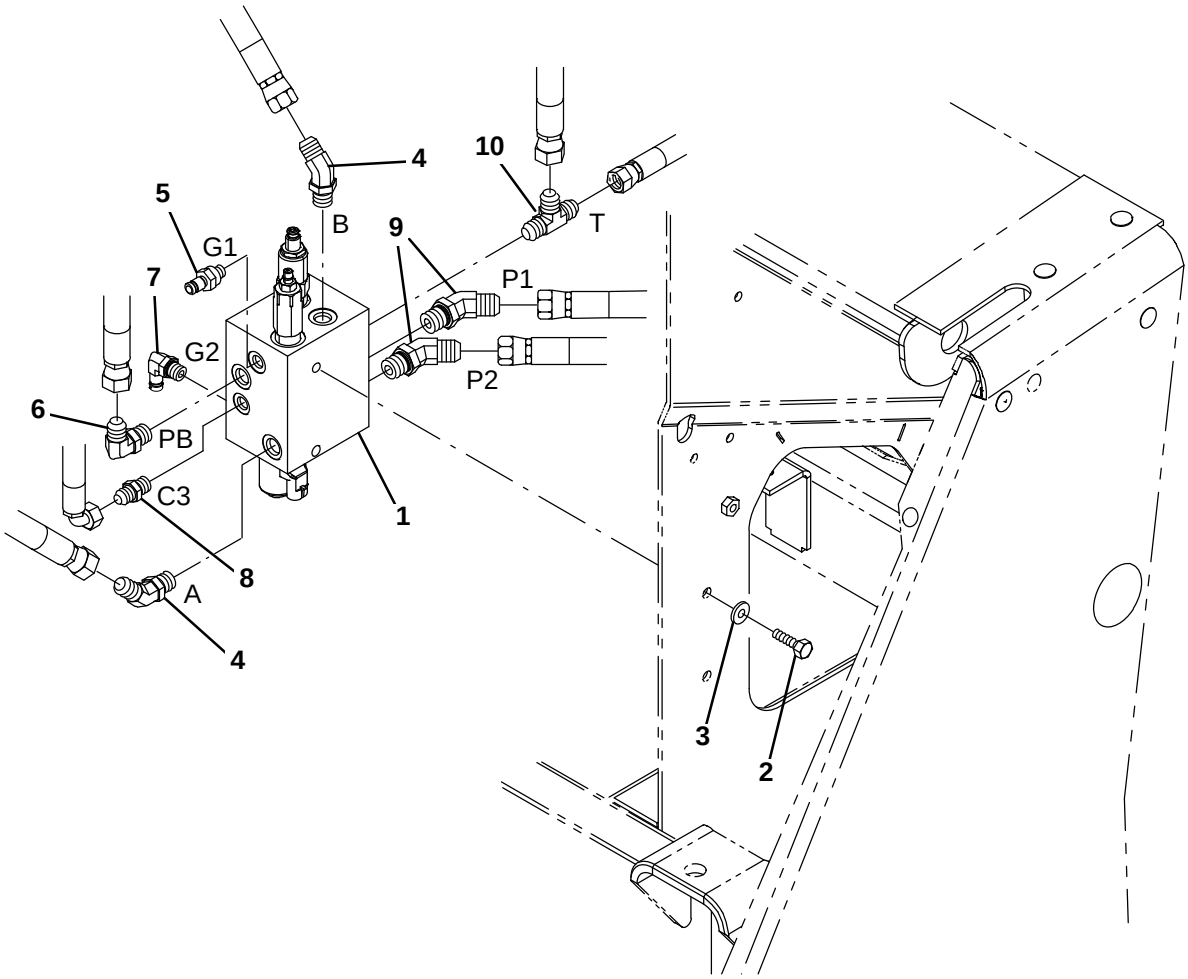

356016−E

Ref.	Part No.	Serial Number	Description	Qty.
1	1046688	(0000−)	Valve, Hyd, Solenoid, 36vdc (See Breakdowns)	1
2	06961	(0000−)	Screw, Hex, M10 X 1.50 X 20, 8.8	2
3	32492	(0000−)	Washer, Flat, 0.38, Std	2
4	47522	(0000−0820)	Fitting, Hyd, E45, Jm06/Om06	2
4	762442	(0821−)	Fitting, Hyd, E45, Fm06/Om06	2
5	395973	(0000−)	Fitting, Hyd, Str, Om04/Qm04	1
6	56820	(0000−0820)	Fitting, Hyd, E90, Jm06/Om06	1
6	762432	(0821−)	Fitting, Hyd, E90, Fm06/Om06	1
7	395974	(0000−)	Fitting, Hyd, E90, Om04/Qm04	1
8	55586	(0000−0820)	Fitting, Hyd, Str, Jm04/Om04	1
8	762428	(0821−)	Fitting, Hyd, Str, Fm04/Om04	1
9	47522	(0000−0820)	Fitting, Hyd, E45, Jm06/Om06	2
9	762442	(0821−)	Fitting, Hyd, E45, Fm06/Om06	2
10	76316	(0000−0820)	Fitting, Hyd, Tee, Jm06/Jm06/Om06, Run	1
10	762435	(0821−)	Fitting, Hyd, Tee, Ff06/Fm06/Fm06, Run	1

Fig. 34 − Electrical Control Box Group

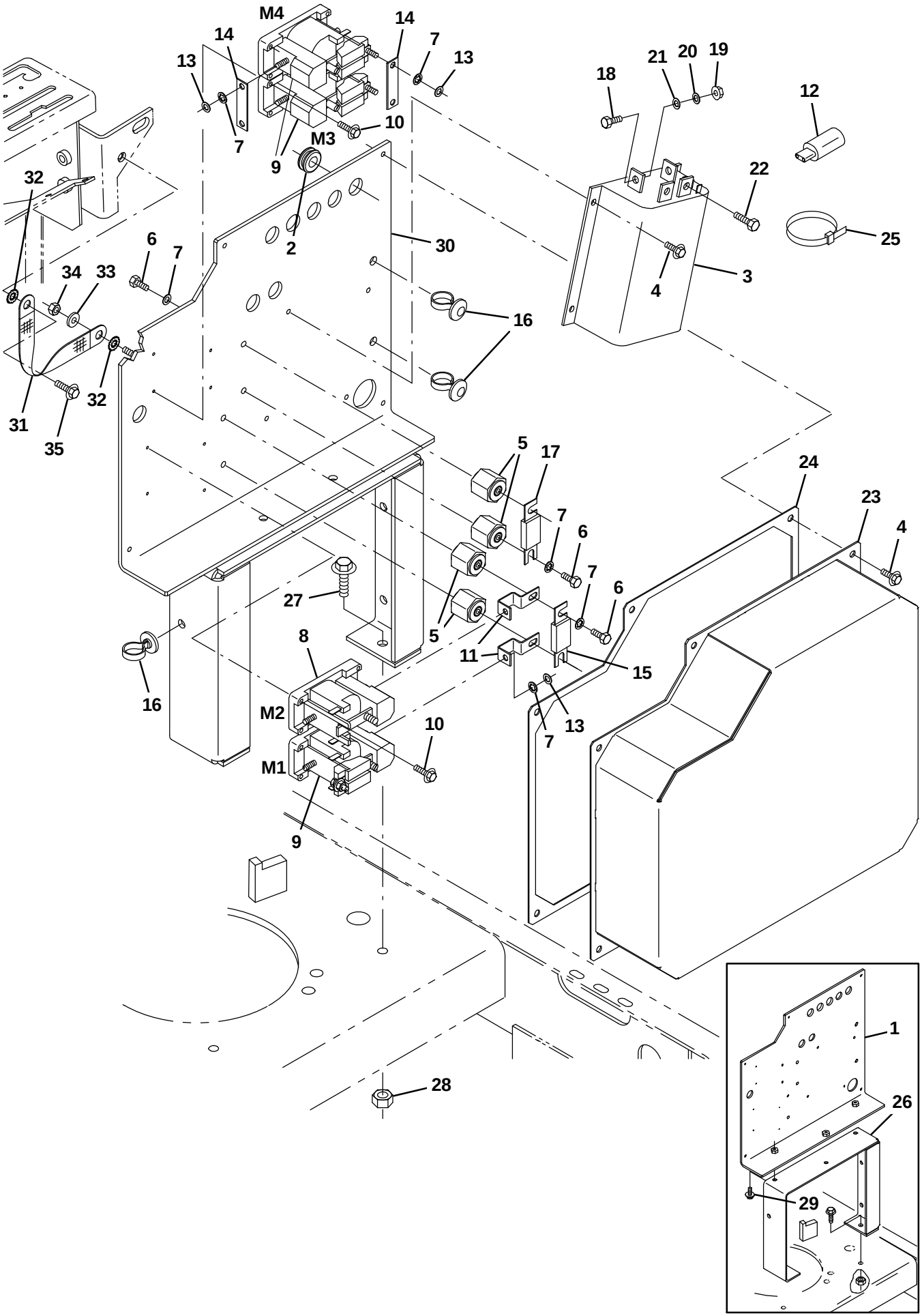

356273− E, CE

Fig. 34 − Electrical Control Box Group

Ref.	Part No.	Serial Number	Description	Qty.
1	9006978	(0000−0097)	Plate, Component, Ele, W/Label [S20] Ce	1
2	10632−15	(0000−)	Grommet, Rbr, 0.50id, F/0.8h, .09 Matl	8
3	15008	(0000−)	Controller, 36vdc [Only F/ Tnv]	1
4	74455	(0000−)	Screw, Hex, M6 X 1.00 X 12, Fmg	4
5	76062	(0000−)	Stand−Off, Wir, M6, Insulator, Panel	4
6	19315	(0000−)	Screw, Hex, .25−20 X 0.50, G5	4
7	32982	(0000−)	Washer, Lock, Int, 0.25	4
8	86375	(0000−)	Contactor, 36vdc [Spno]	1
9	87482	(0000−)	Relay, 36vdc, 100a, Spdt No [Cabelform]	3
10	86417	(0000−)	Screw, Hex, 06−32 X 0.75, Fmg, Pl	8
11	87507	(0000−)	Busbar, Fuse, .6 0.6w 0.8h 2.0l	2
12	360516	(0000−)	Resistor, Ele, Plug	1
13	32483	(0000−)	Washer, Flat, 0.25, Sae	6
14	87483	(0000−)	Busbar, .06 0.6w 2.5l 2/.28h	2
15	86379	(0000−)	Fuse, 100a, 0.88 2.4l, 125volt	1
16	1041873	(0000−)	Fastener, Wire, Tie [Button Head]	3
17	87318	(0000−)	Fuse, 080a, 0.88 2.4l, 125volt,Slow−Blow	1
18	16931	(0000−)	Screw, Hex, M8 X 1.25 X 20, 8.8	3
19	07791	(0000−)	Nut, Hex, Flng, M8 X 1.25	4
20	32490	(0000−)	Washer, Flat, 0.25, Std	4
21	32984	(0000−)	Washer, Lock, Int, 0.31	4
22	39277	(0000−)	Screw, Hex, M8 X 1.25 X 25, 8.8	1
23	9006987	(0000−)	Cover, Wldt, Component, Ele, W/Label [S20] Ce	1
24	1053395	(0000−)	Gasket, Cover	1
25	49266	(0000−)	Tie, Cable, Nyl, 07.3l .19w 1.8 Max D	5
26	1050158	(0000−0097)	Bracket, Sppt, Ele Panl	1
27	1037358	(0000−)	Screw, Hex, M10 X 1.50 X 35, 9.8, Sems	2
28	07792	(0000−)	Nut, Hex, Flng, M10 X 1.50	2
29	1020341	(0000−0097)	Screw, Hex, M8 X 1.25 X 20, Ss, Sems	3
30	9007177	(0098−)	Bracket, Panl, Contrl, W/Label, Eu	1
31	1052864	(0000−)	Strap, Brd,Ground, 1.5mm X 23mm X 200mm	1
32	41141	(0000−)	Washer, Lock, Int−Ext, 0.31	2
33	32491	(0000−)	Washer, Flat, 0.31, Std	1
34	08709	(0000−)	Nut, Hex, Lock, M8 X 1.25, Nl	1
35	1037346	(0000−)	Screw, Hex, M8 X 1.25 X 25, 9.8, Sems	1

Fig. 35 − Electrical Control Box Wire Connection Group

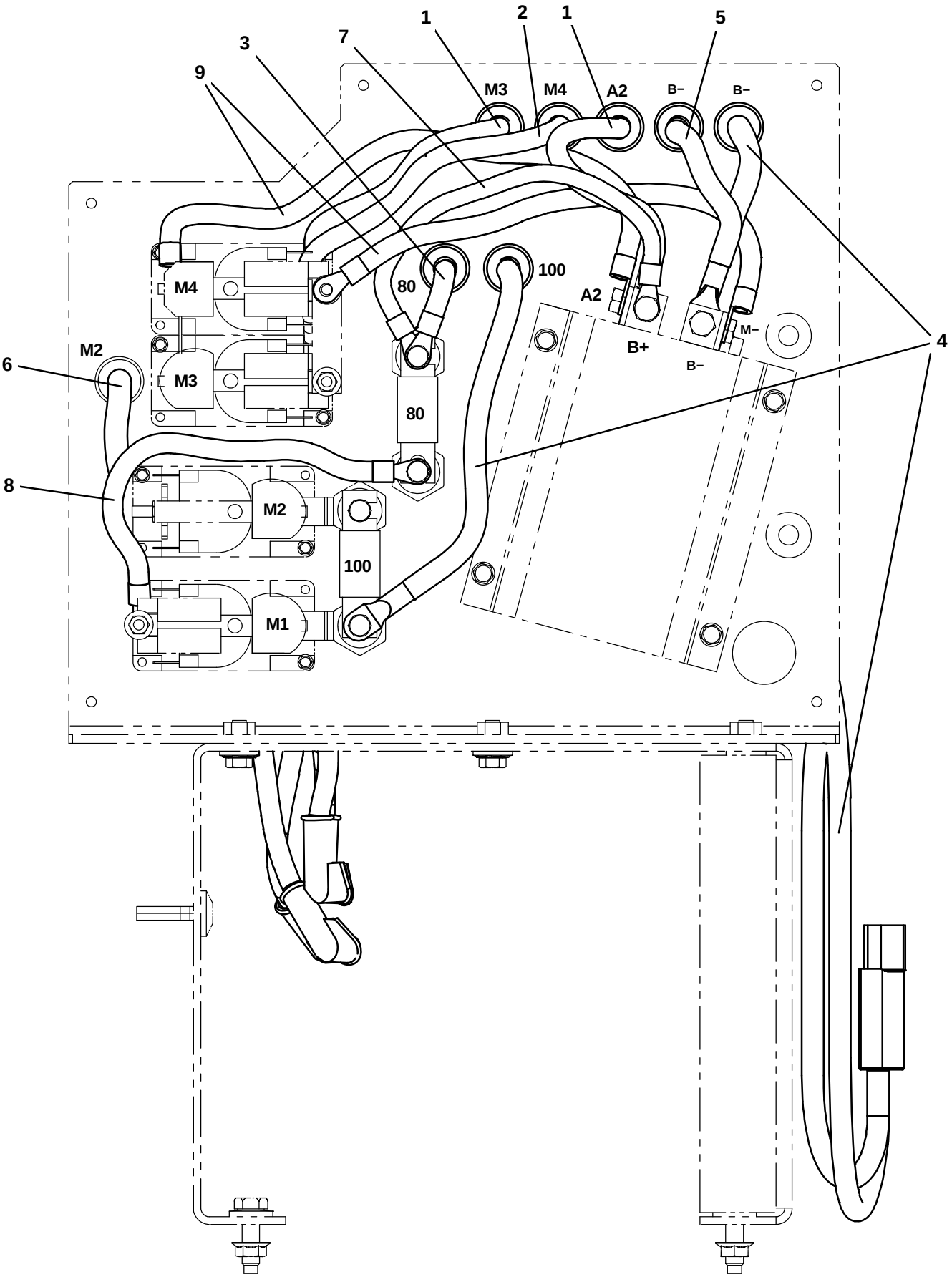

356011− E

Fig. 35 − Electrical Control Box Wire Connection Group

Ref.	Part No.	Serial Number	Description	Qty.
1	87496	(0000−)	Cable, 04ga 30.0l Blk .34ring /.34ring	2
2	71529	(0000−)	Cable, 04ga 32.0l Blk .34ring /.34ring	1
3	87558	(0000−)	Cable, 04ga 21.0l Blk .28ring /.34ring	1
4	1052625	(0000−)	Harness, Wire, Controller	1
5	86398	(0000−)	Cable, 04ga 60.0l Blk .34ring /.34ring	1
6	360989	(0000−)	Cable, 04ga 48.0l Blk .28ring /.34ring	1
7	15846	(0000−)	Cable, 06ga 11.0l Blk .28ring /.34ring	1
8	223356	(0000−)	Cable, 04ga 12.0l Blk .34ring /.34ring	1
9	87495	(0000−)	Cable, 04ga 15.0l Blk .28ring /.34ring	2

Fig. 36 − Electrical Schematic

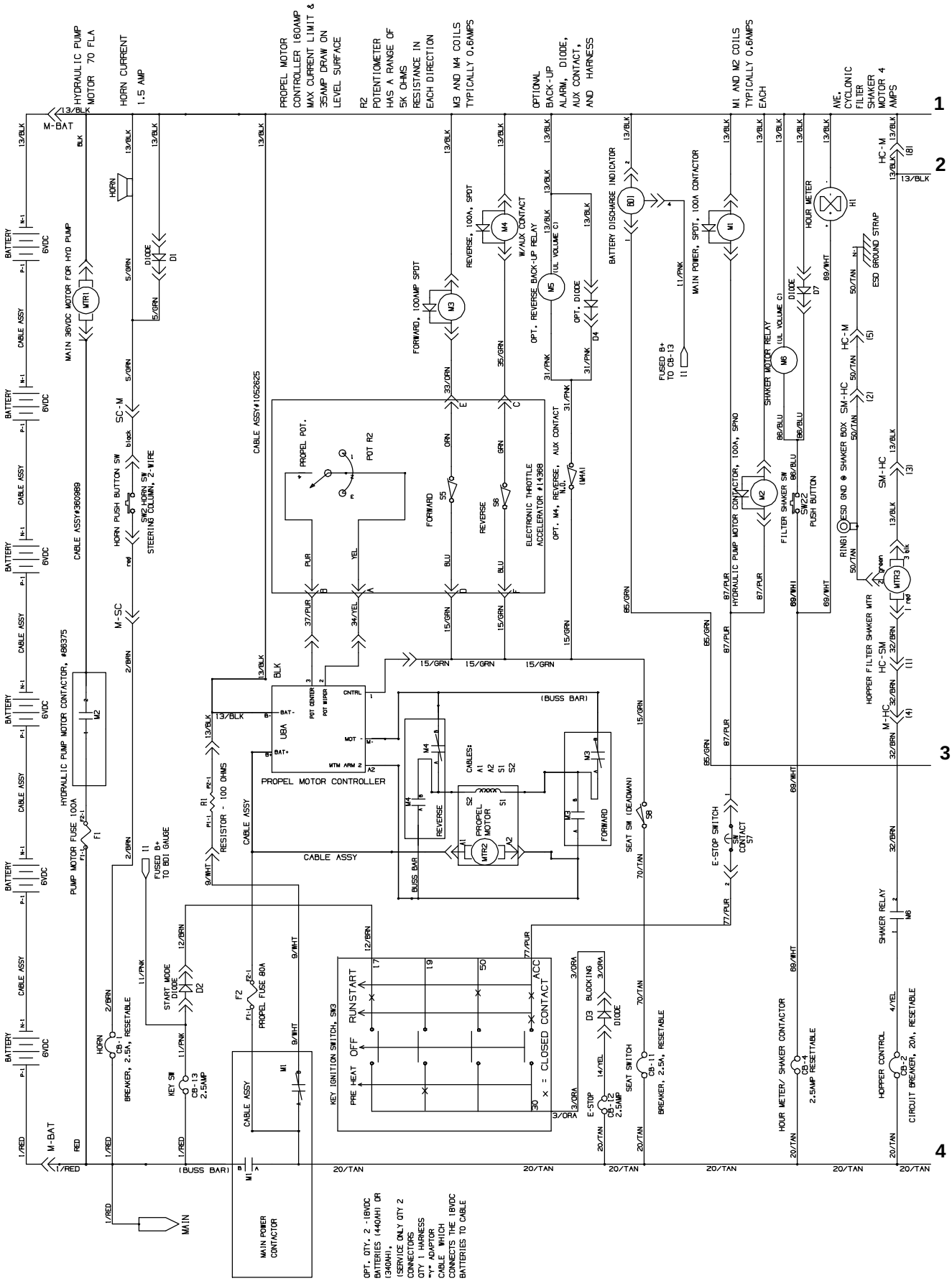

354987, 1048610 − E

Fig. 36 − Electrical Schematic

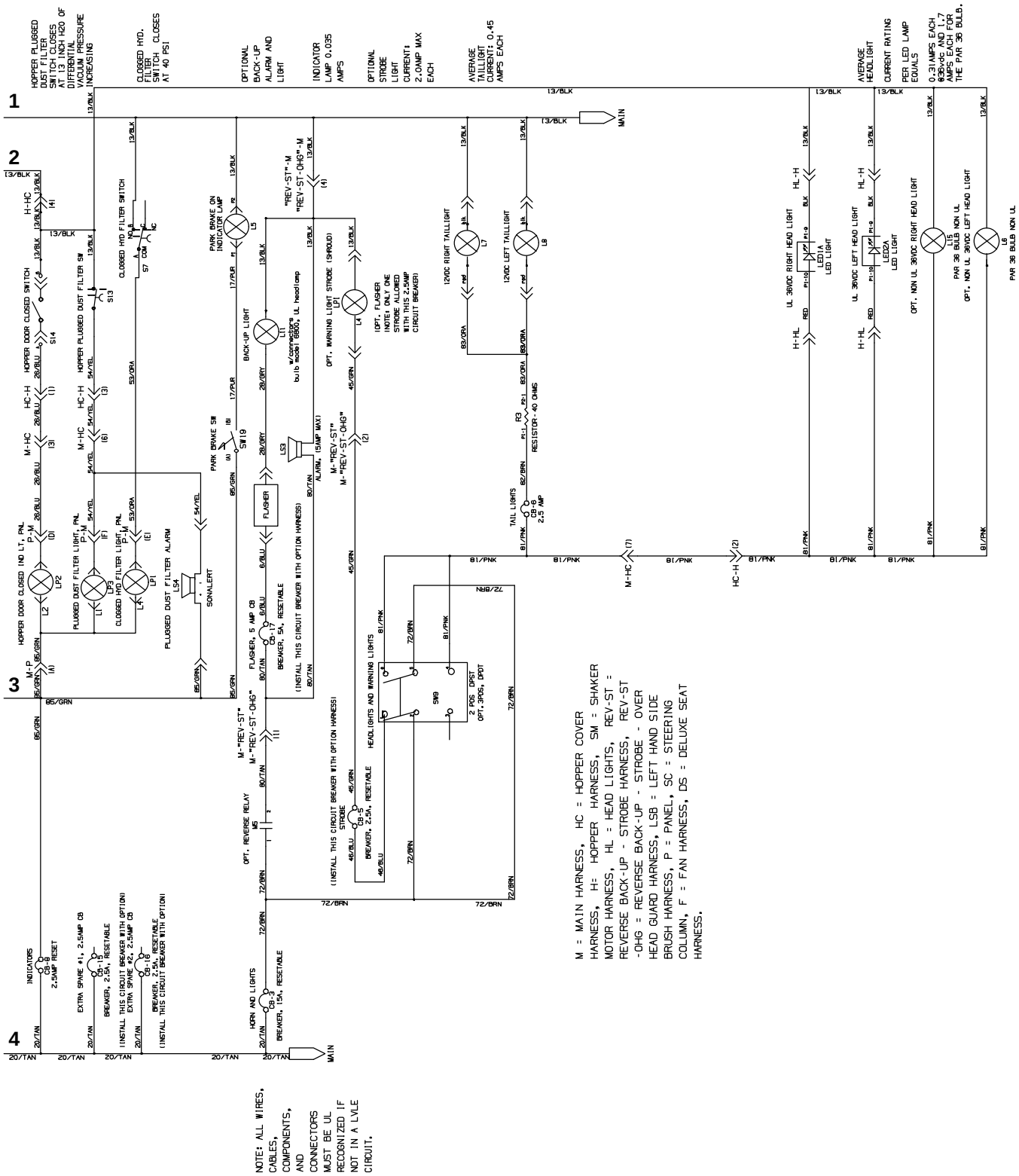

354987, 1048610 − E

Fig. 36 − Electrical Schematic

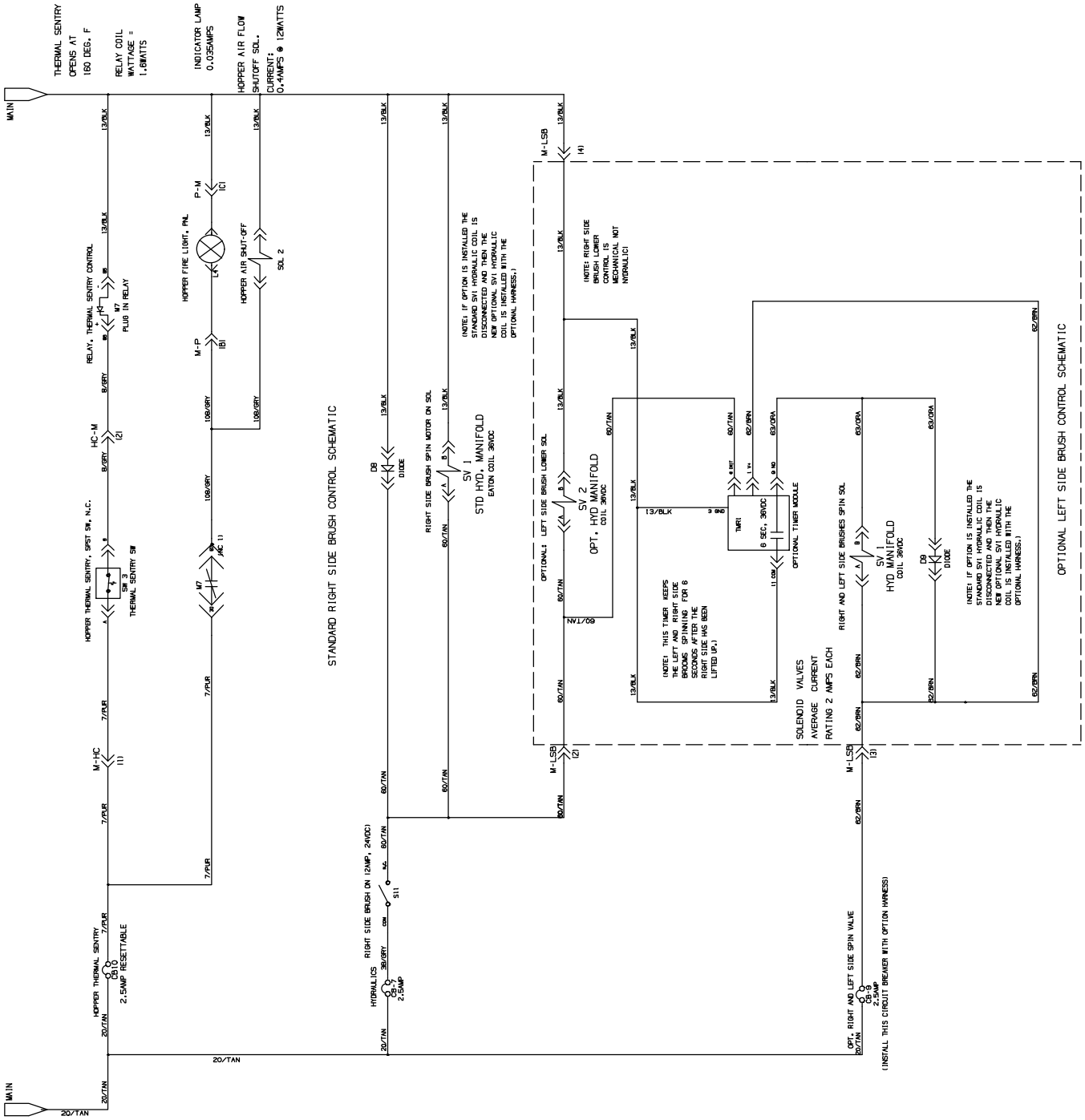

354987, 1048610 − E

Fig. 36 − Electrical Schematic

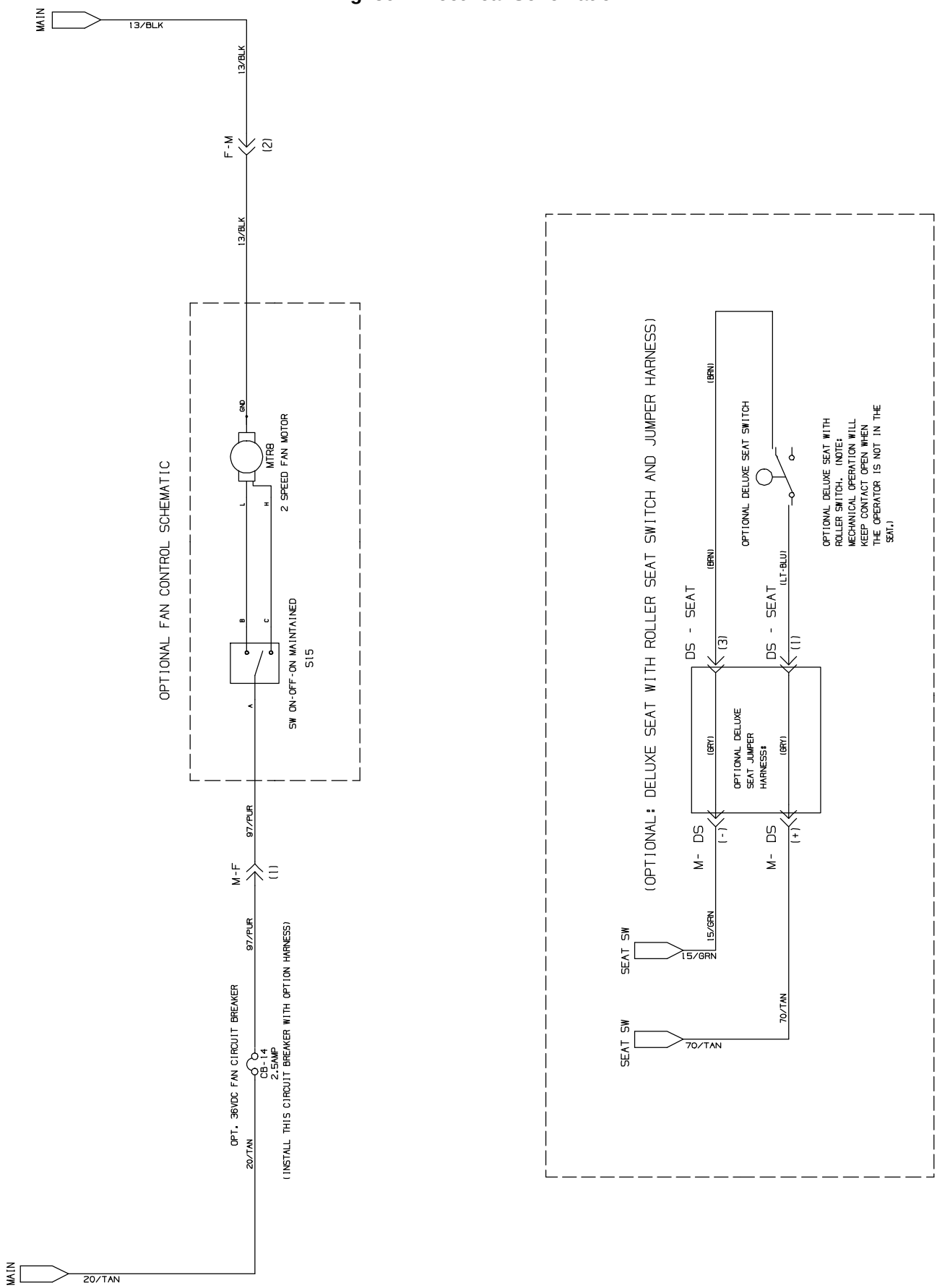

354987, 1048610 − E

Fig. 37 − Wire Harnesses Group

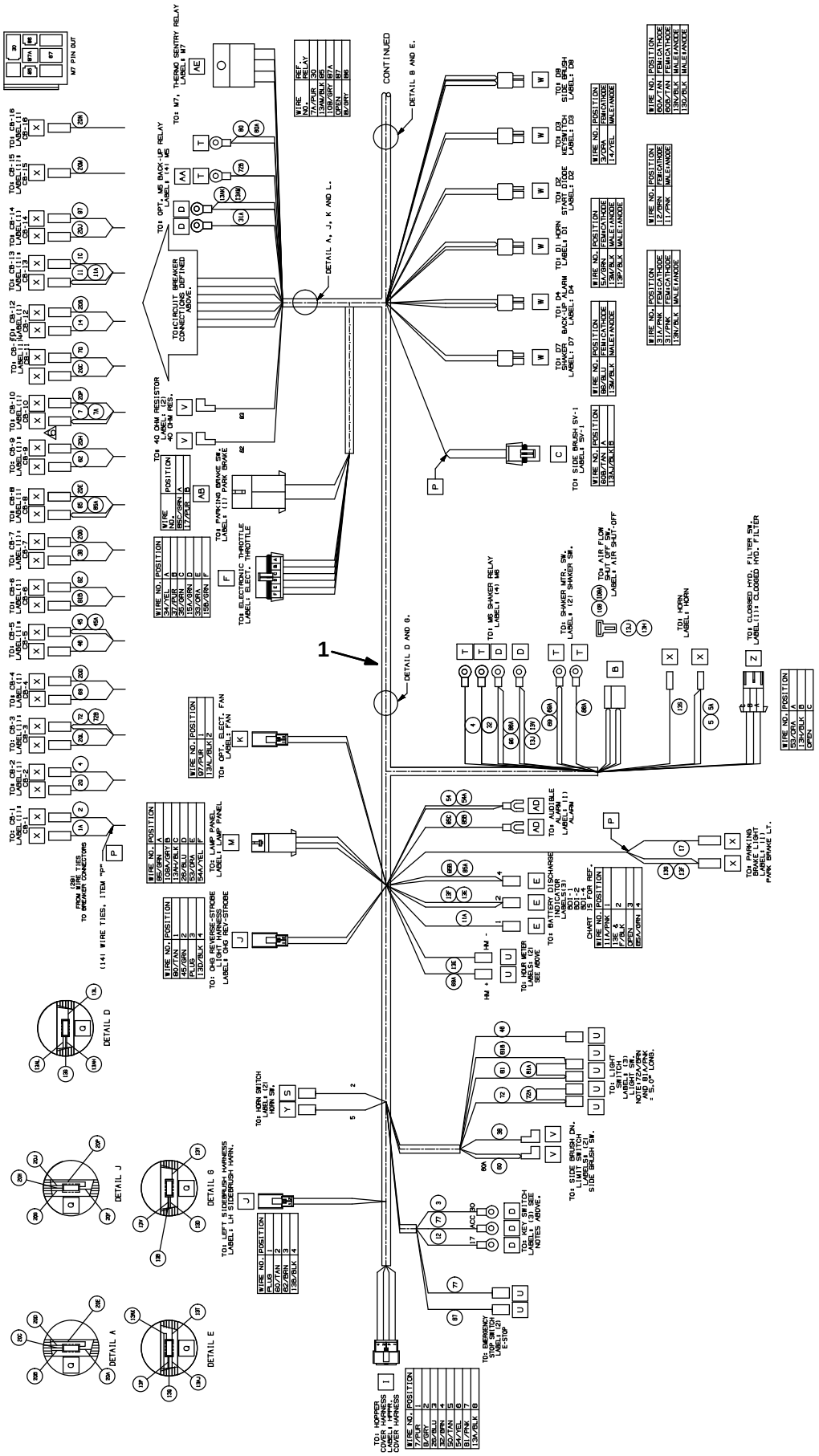

354990 − E

Fig. 37 − Wire Harnesses Group

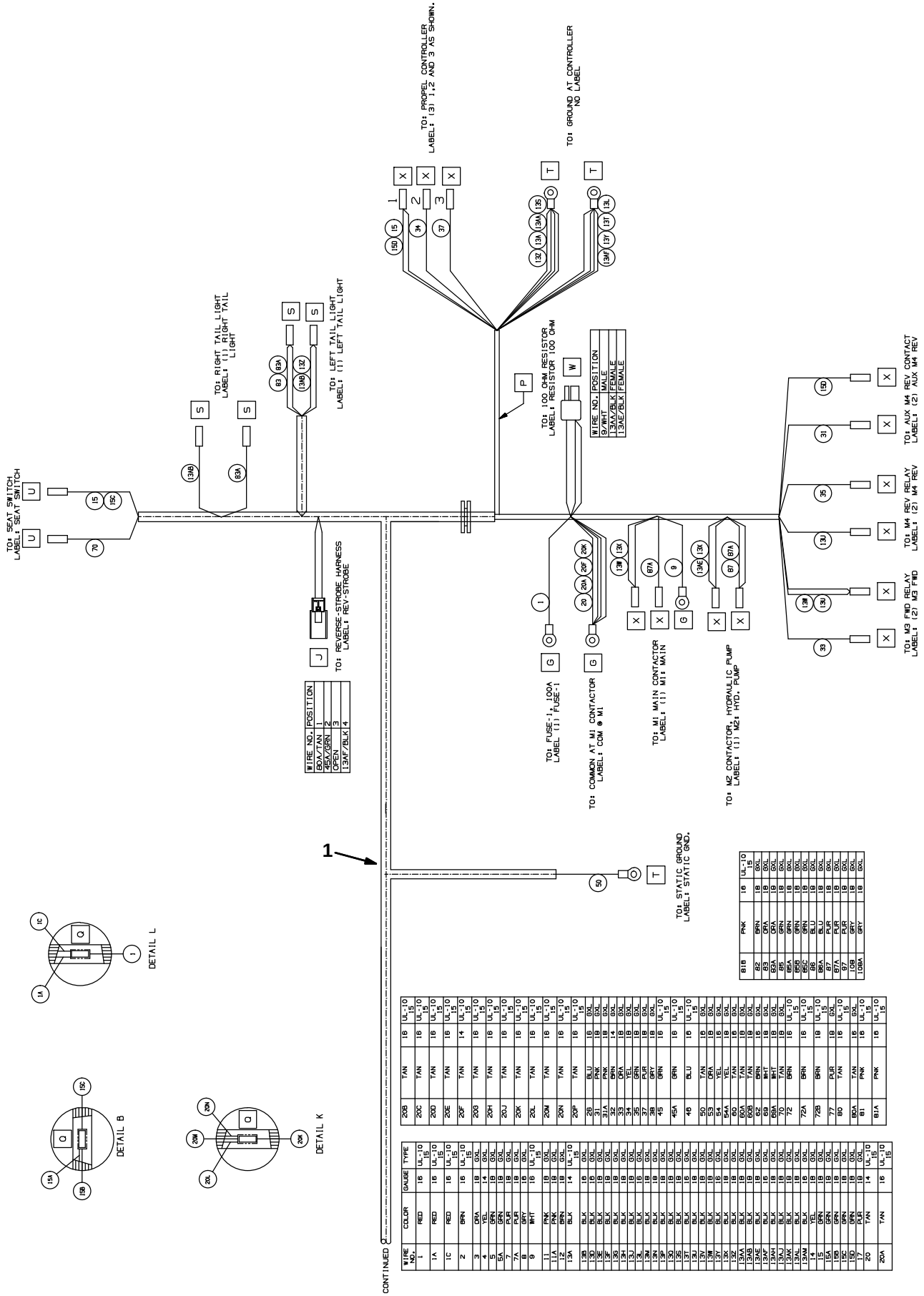

354990 − E

Fig. 37 − Wire Harnesses Group

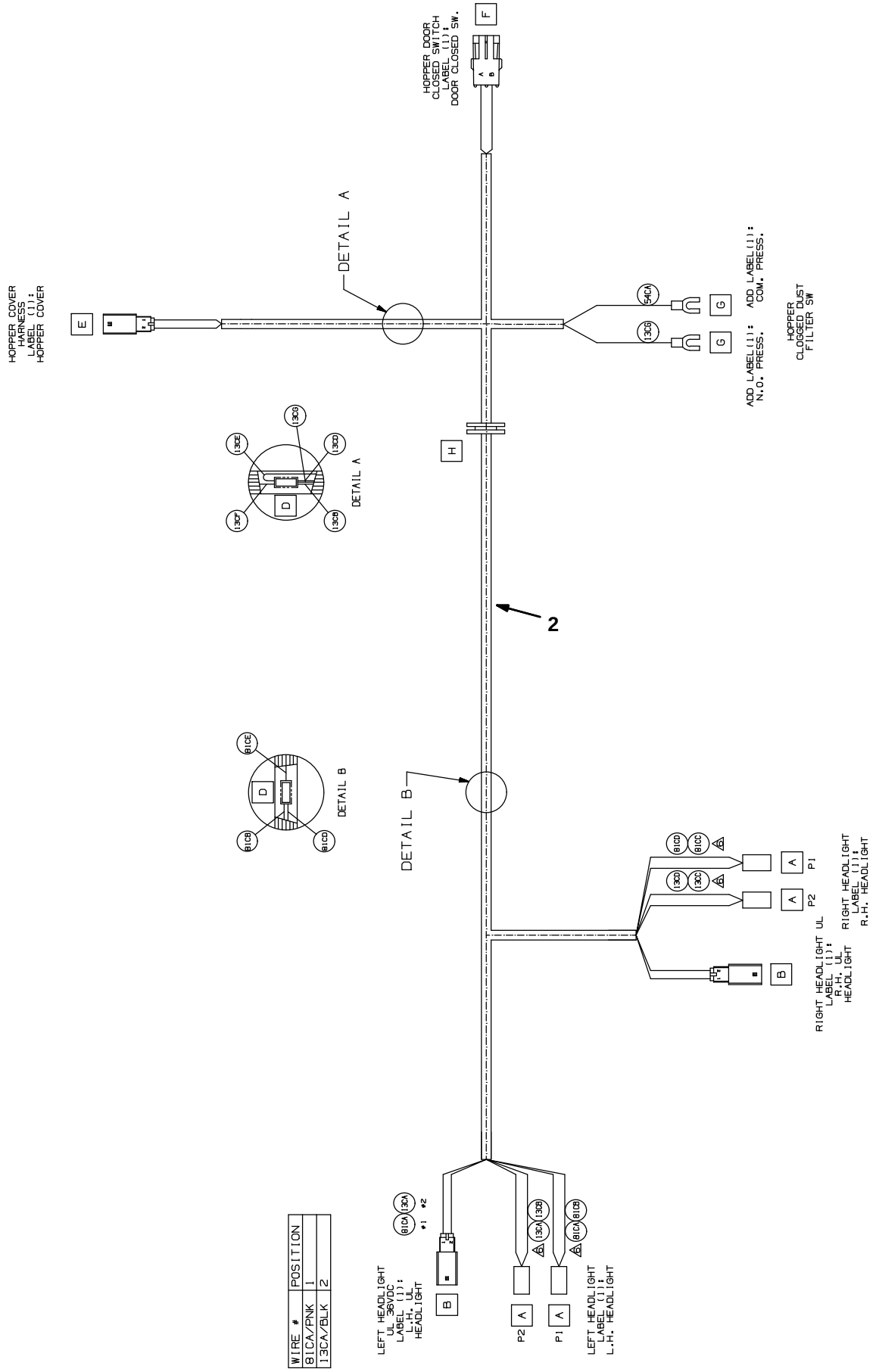

354990 − E

Fig. 37 − Wire Harnesses Group

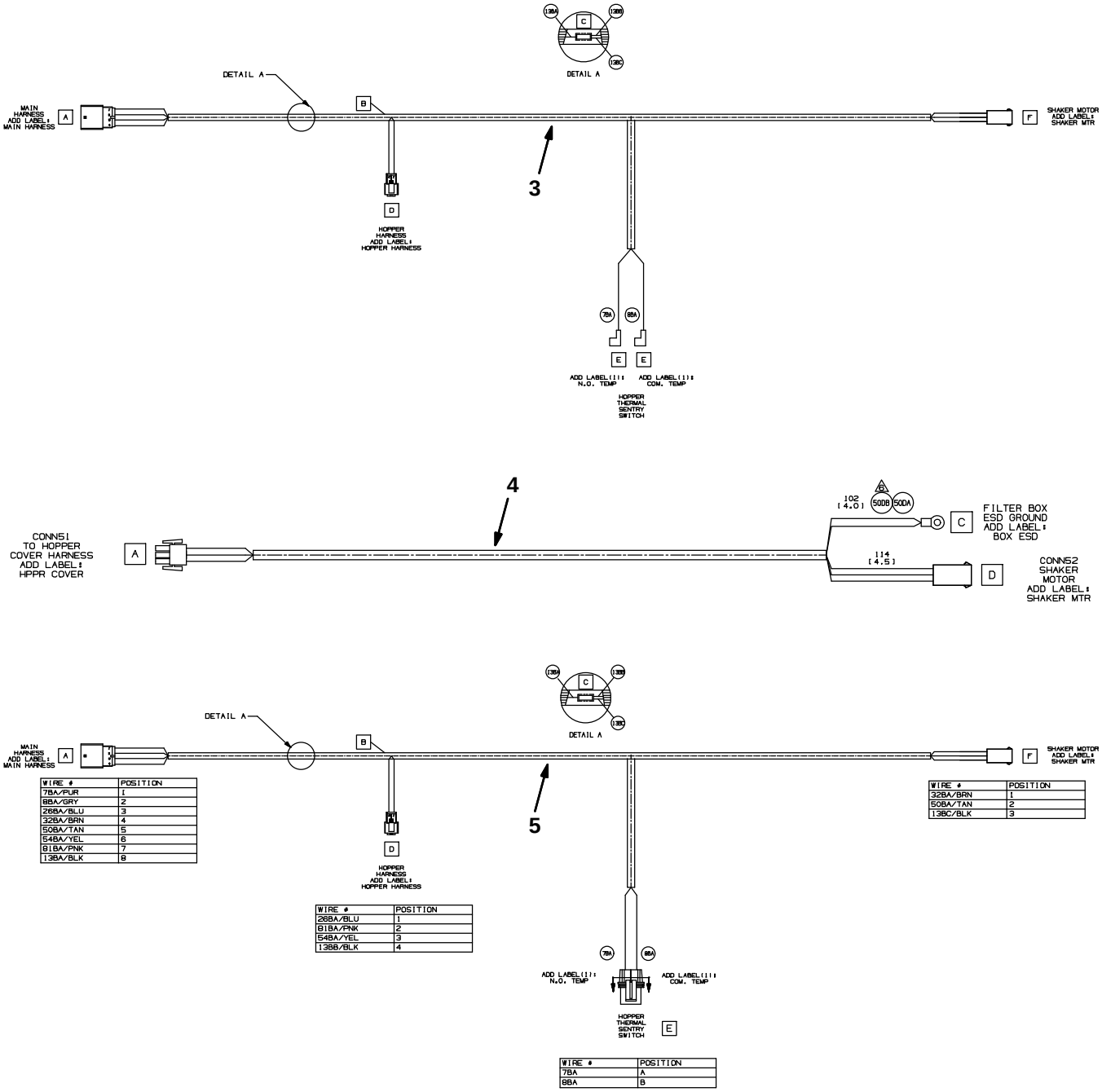

354990 − E, CE

Ref.	Part No.	Serial Number	Description	Qty.
1	1056624	(0000−)	Harness, Main, Ele [S20]	1
2	1048529	(0000−)	Harness, Hppr, 36vdc [S20]	1
3	1048504	(0000−0158)	Harness, Hppr, Cover [S20]	1
4	1047717	(0000−)	Harness, Shakr, Motor [S20]	1
5	1061582	(0159−)	Harness, Hppr, Cover [S20]	1

Fig. 38 − Label Group

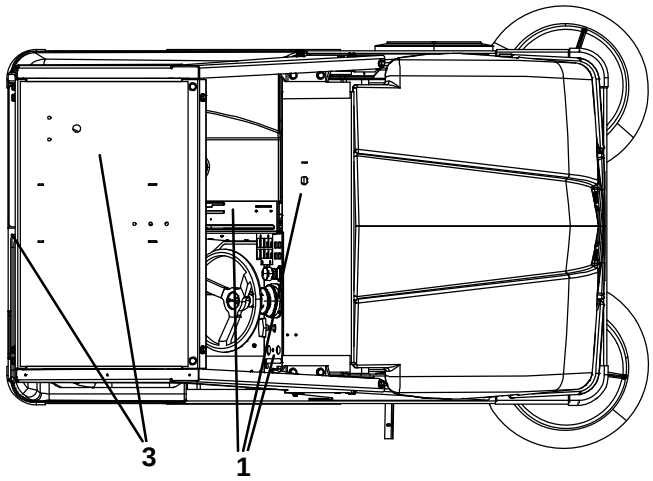

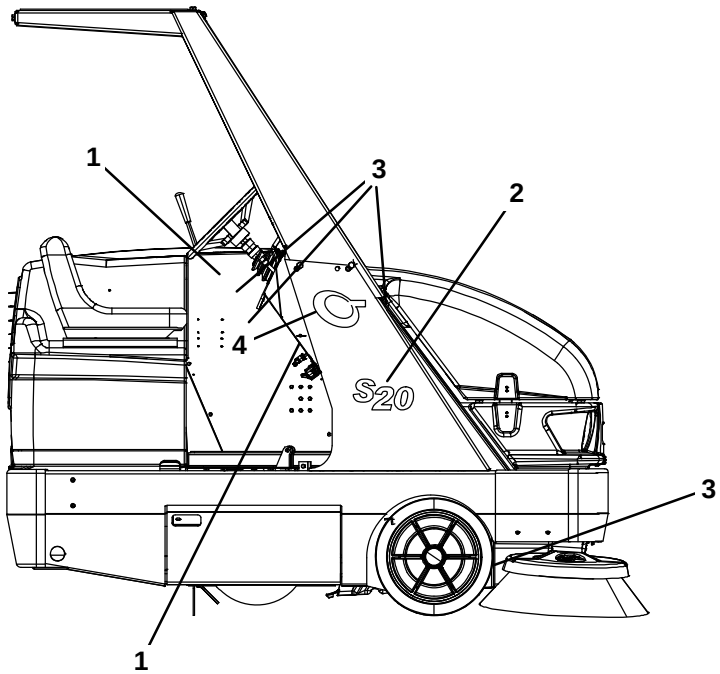

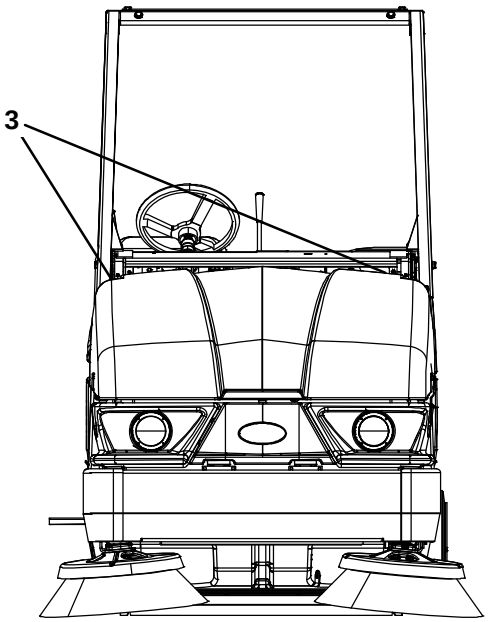

354978 − E

Ref.	Part No.	Serial Number	Description	Qty.
1	1050727	(0000−)	Label Set, Opertnl [S20 Ele]	1
2	1050170	(0000−)	Label, Model [S20]	1
3	1058333	(0000−)	Label Set, Info/Hzrd [S20]	1
4	1057977	(000000−)	Label [Cyclone, Sweepmax S20]	2

SECTION 3

Contents **Page**

Fig. 1 − Backup Alarm and Flashing Light Group, Overhead Guard 3-2
Fig. 2 − Overhead Guard Kit 3-4
Fig. 3 − Cab Overhead Guard Group 3-6
Fig. 4 − Cab Frame and Windows Group 3-8
Fig. 5 − Cab Door Group 3-10
Fig. 6 − Corner Bumper Kit 3-12
Fig. 7 − Dual Side Brush Lift Group, LH 3-14
Fig. 8 − Dual Side Brush Motor and Pivot Group, LH 3-16
Fig. 9 − Dual Side Brush Wire Harness Group . 3-18
Fig. 10 − Dual Side Brush Hydraulic Valve Group 3-19
Fig. 11 − Dual Side Brush Hydraulic Hose Diagram 3-20
Fig. 12 − Side Brush Dust Control Kit 3-22
Fig. 13 − Dual Side Brush Dust Control Kit 3-24
Fig. 14 − Vacuum Wand Kit 3-26
Fig. 15 − Battery Charger Group 3-28
Fig. 16 − Battery Group, 36VDC 340 AH 3-29
Fig. 17 − Battery Group 36V 425Ah 3-30
Fig. 18 − Documentation Group 3-31

Fig. 1 − Backup Alarm and Flashing Light Group, Overhead Guard

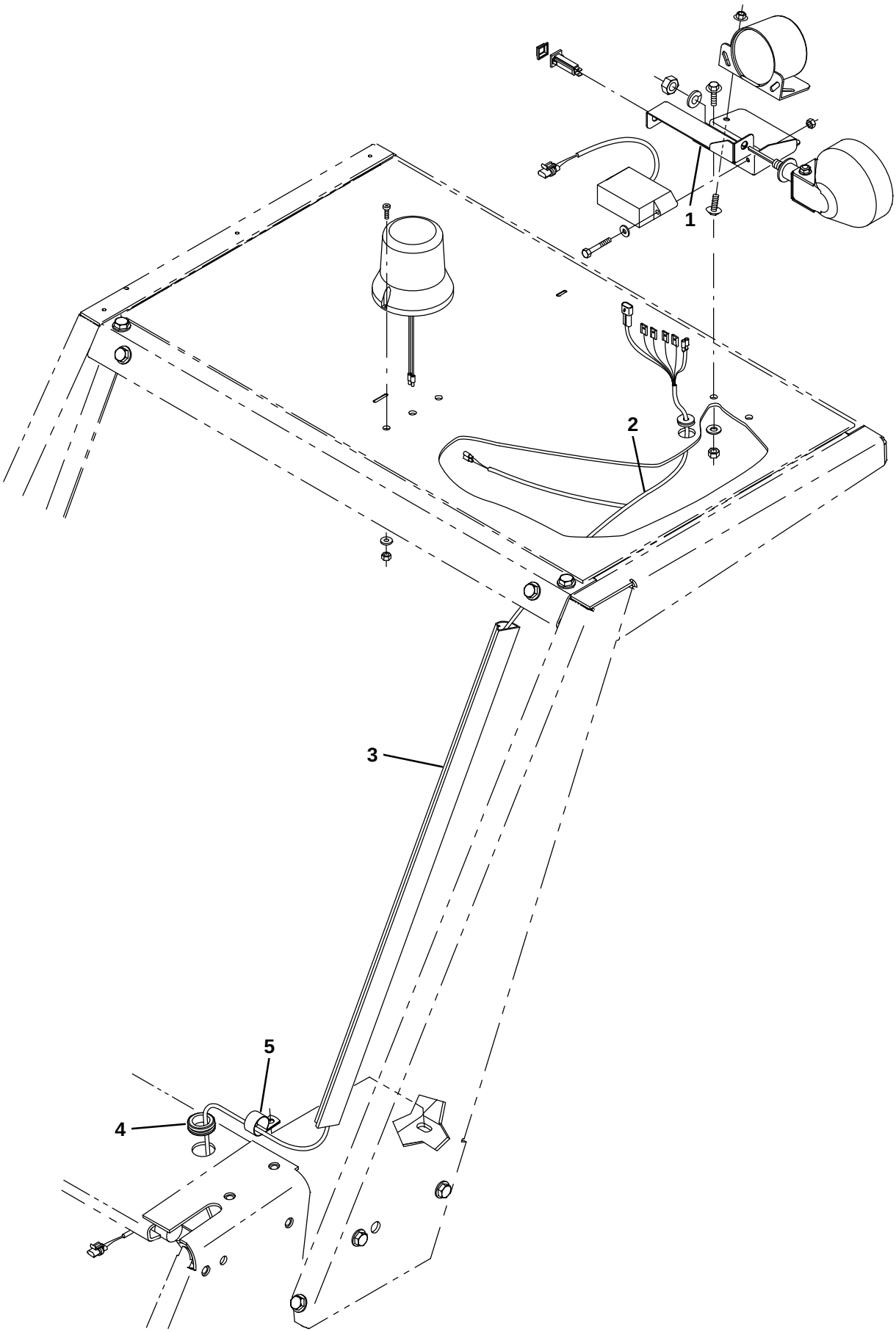

356250− E, CE

Fig. 1 − Backup Alarm and Flashing Light Group, Overhead Guard

Ref.	Part No.	Serial Number	Description	Qty.
1	1050046	(0000−)	Bracket, Mtg, Horn	1
2	1052475	(0000−)	Harness, Alarm / Strobe, Ohg, 36Vdc [S20]	1
3	55034	(0000−)	Duct, Vyl, 0.74 X 1.50 .75D Max 48.0L	1
4	10632−1	(0162−)	Grommet, Rbr, 1.06id, F/1.4h, .19 Matl	1
5	58366	(0162−)	Clamp, Cable, Stl, 1.25d X 1.00w, 1hole	1

Fig. 2 − Overhead Guard Kit

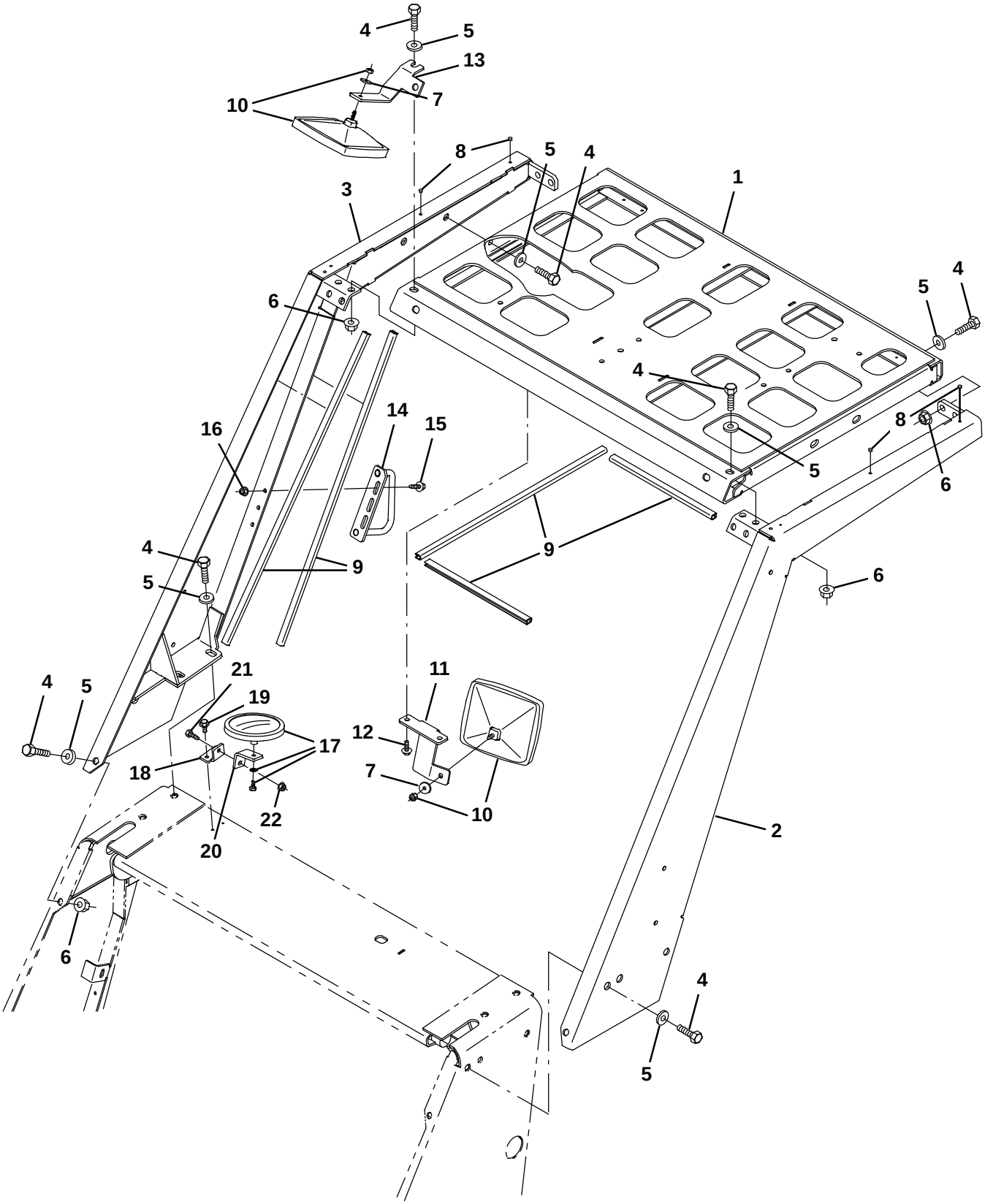

356023 − ALL

Fig. 2 − Overhead Guard Kit

	Ref.	Part No.	Serial Number	Description	Qty.
▽		9006015	(0000−)	Ohg Kit, Ci [S20]	1
▲	1	1057585	(0000−)	Panel Wldt, Top, Ohg	1
▲	2	1047704	(0000−)	Channel Wldt, Ohg, Lh	1
▲	3	1047705	(0000−)	Channel Wldt, Ohg, Rh	1
▲	4	41346	(0000−)	Screw, Hex, M12 X 1.75 X 30, 8.8	22
▲	5	32486	(0000−)	Washer Flat,0.50,Sae	22
▲	6	07793	(0000−)	Nut, Hex, Flng, M12 X 1.75	10
▲	7	32491	(0000−)	Washer, Flat, 0.31, Std	2
▲	8	379000	(0000−)	Plug, Hole, Rnd, 0.22H .00−.06, Blk Nyl	4
▲	9	1046406	(0000−)	Molding, Afmkt, Trim, Pvc, .18 .31, 08Ft	1
▲	10	49034	(0000−)	Mirror, Convex, 06.7 X 06.2	2
▲	11	1047480	(0000−)	Bracket, Mtg, Mirror	1
▲	12	763045	(0000−)	Screw, Hex, M8 X 1.25 X 20, Fmg	2
▲	13	1049992	(0000−)	Bracket, Mtg, Mirror, Top	1
▲	14	1055757	(0000−)	Handle Wldt, Door	1
▲	15	1037354	(0000−)	Screw, Hex, M8 X 1.25 X 30, 9.8, Sems	3
▲	16	07791	(0000−)	Nut, Hex, Flng, M8 X 1.25	3
▲	17	1053233	(0000−)	Mirror, Flat, 05.0d	1
▲	18	1049990	(0000−)	Bracket, Mtg, Mirror, Brush	1
▲	19	361339	(0000−)	Screw, Hex, M6 X 1.00 X 16, Fmg	2
▲	20	1049991	(0000−)	Bracket, Mtg, Mirror, Brush	1
▲	21	06943	(0000−)	Screw, Hex, M6 X 1.00 X 20, 8.8	1
▲	22	08708	(0000−)	Nut, Hex, Lock, M6 X 1.00, Nl	1

Fig. 3 − Cab Overhead Guard Group

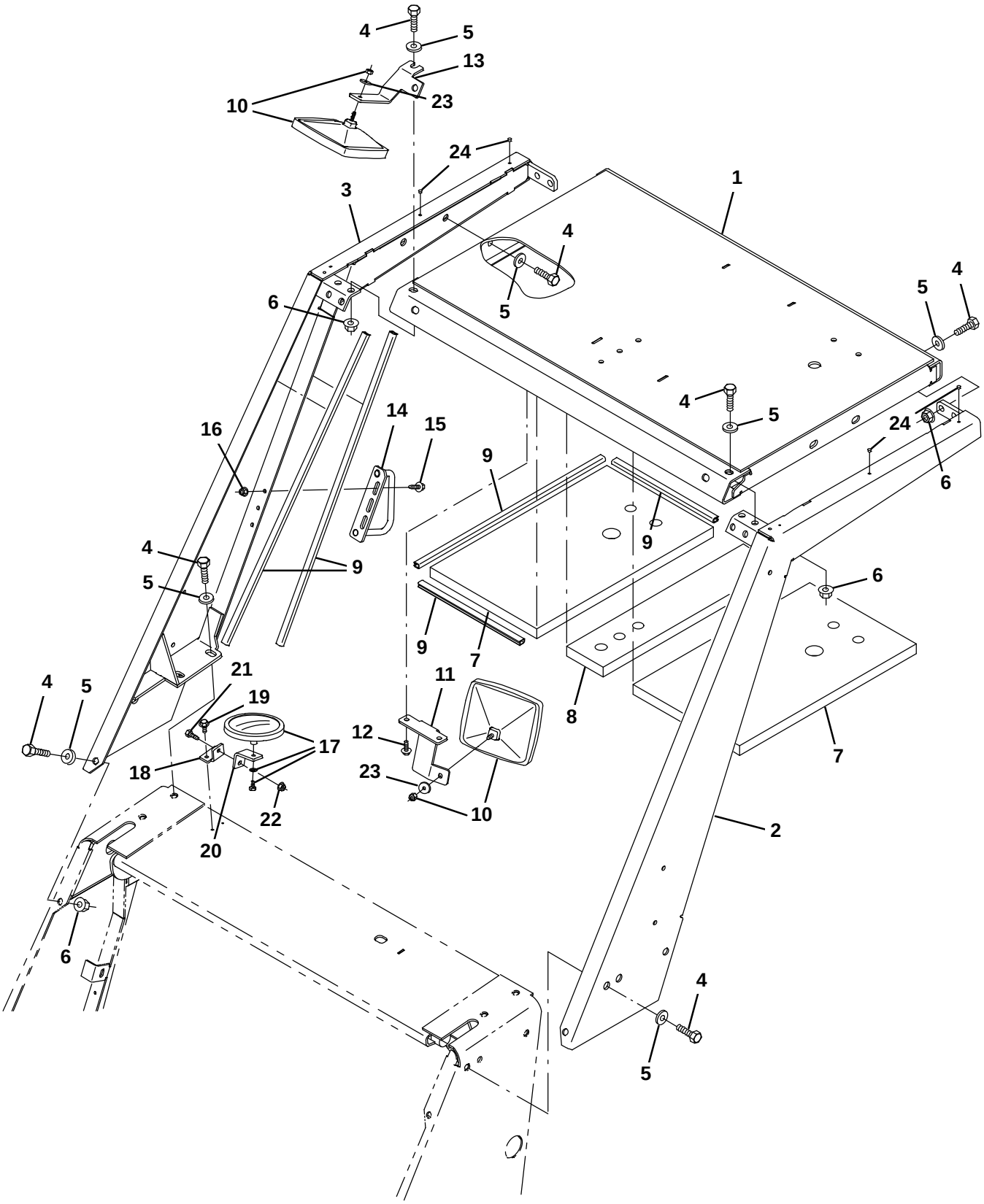

354974 − ALL

Fig. 3 − Cab Overhead Guard Group

NOTE: Cab Kit (including OHG), Tennant Part Number 9006304, includes; Fig. 3, Fig. 4 and Fig. 5.

Ref.	Part No.	Serial Number	Description	Qty.
1	1044075	(0000−)	Panel Wldt, Top, Ohg	1
2	1047704	(0000−)	Channel Wldt, Ohg, Lh	1
3	1047705	(0000−)	Channel Wldt, Ohg, Rh	1
4	41346	(0000−)	Screw, Hex, M12 X 1.75 X 30, 8.8	22
5	32486	(0000−)	Washer Flat,0.50,Sae	22
6	07793	(0000−)	Nut, Hex, Flng, M12 X 1.75	10
7	1049937	(0000−)	Insulation, Acstc	2
8	1049938	(0000−)	Insulation, Acstc	1
9	1046406	(0000−)	Molding, Afmkt, Trim, Pvc, .18 .31, 08Ft	1
10	49034	(0000−)	Mirror, Convex, 06.7 X 06.2	2
11	1047480	(0000−)	Bracket, Mtg, Mirror	1
12	763045	(0000−)	Screw, Hex, M8 X 1.25 X 20, Fmg	2
13	1049992	(0000−)	Bracket, Mtg, Mirror, Top	1
14	1055757	(0000−)	Handle Wldt, Door	1
15	1037354	(0000−)	Screw, Hex, M8 X 1.25 X 30, 9.8, Sems	3
16	07791	(0000−)	Nut, Hex, Flng, M8 X 1.25	3
17	1053233	(0000−)	Mirror, Flat, 05.0d	1
18	1049990	(0000−)	Bracket, Mtg, Mirror, Brush	1
19	361339	(0000−)	Screw, Hex, M6 X 1.00 X 16, Fmg	2
20	1049991	(0000−)	Bracket, Mtg, Mirror, Brush	1
21	06943	(0000−)	Screw, Hex, M6 X 1.00 X 20, 8.8	1
22	08708	(0000−)	Nut, Hex, Lock, M6 X 1.00, Nl	1
23	32491	(0000−)	Washer, Flat, 0.31, Std	2
24	379000	(0000−)	Plug, Hole, Rnd, 0.22H .00−.06, Blk Nyl	4

Fig. 4 − Cab Frame and Windows Group

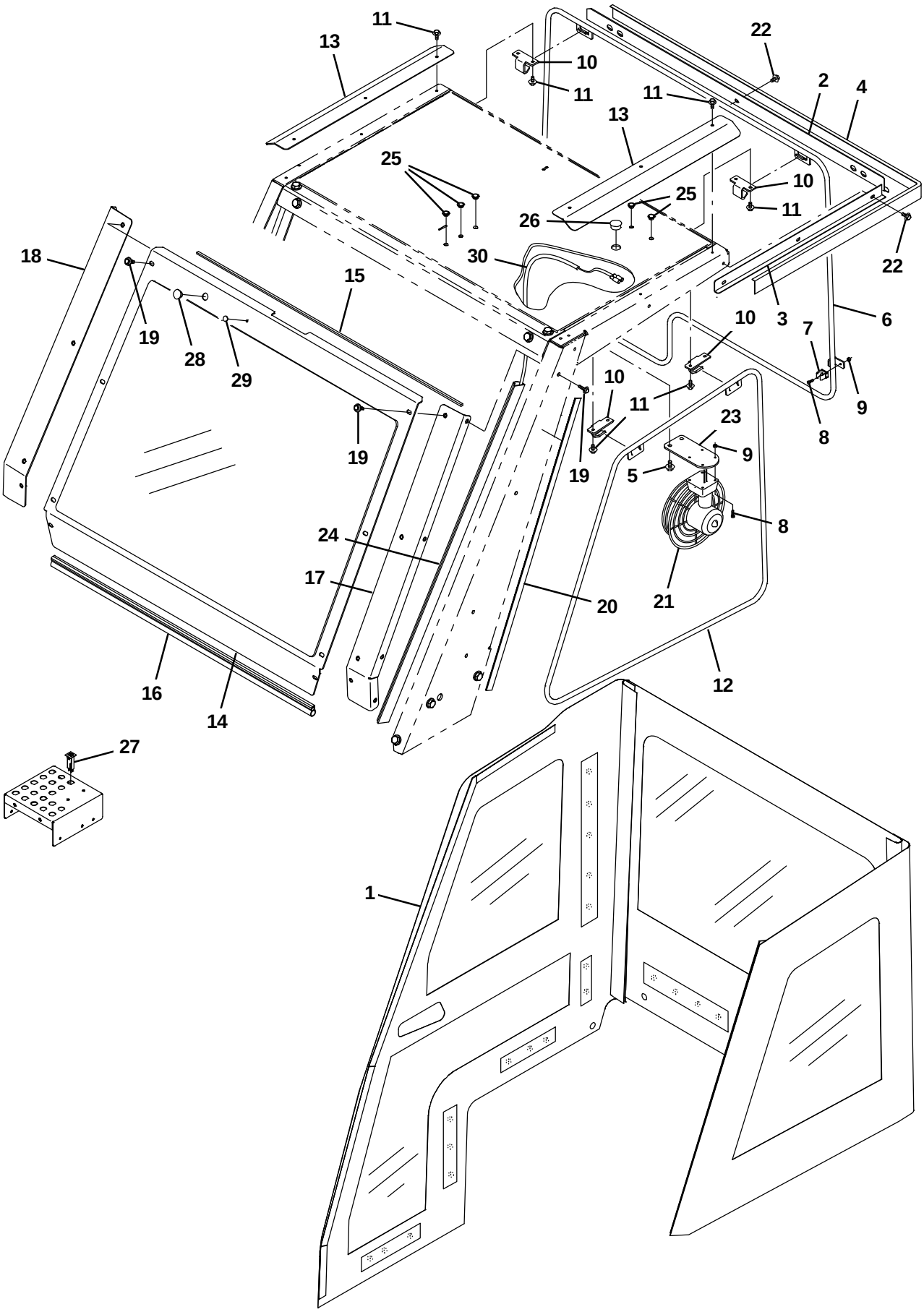

354998 − E

Fig. 4 − Cab Frame and Windows Group

NOTE: Cab Kit (For machines equipped with OHG), Tennant Part Number 9006308, includes; Fig. 4 and Fig. 5.
NOTE: Cab Kit (including OHG), Tennant Part Number 9006306, includes; Fig. 3, Fig. 4 and Fig. 5.

Ref.	Part No.	Serial Number	Description	Qty.
1	1049702	(0000−)	Panel Assy, Cab	1
2	1064550	(0295−)	Angle, Cab, Rear [Drip Ledge, S20]	1
3	1064551	(0295−)	Angle, Cab, Side [Drip Ledge, S20]	1
4	312584	(0295−)	Cs, Seal, Lip [76038ddur]	1
5	763045	(0000−)	Screw, Hex, M8 X 1.25 X 20, Fmg	2
6	1047690	(0000−)	Panel Wldt, Frame, Rear	1
7	1047592	(0000−)	Clip, Grip, Pipe, 0.50, Plstc	1
8	06927	(0000−)	Screw, Pan, Phl, M4 X 0.70 X 16, 4.8	5
9	02850	(0000−)	Nut, Hex, Lock, M4 X 0.70, Nl	4
10	1047653	(0000−)	Bracket, Mtg, Panel, Cab	4
11	361339	(0000−)	Screw, Hex, M6 X 1.00 X 16, Fmg	14
12	1047456	(0000−)	Panel Wldt, Frame, Cab	1
13	1047706	(0000−)	Plate, Shield, Top	2
14	1048849	(0000−)	Pane Assy, Windshield	1
15	1055606	(0000−)	Seal, .19, .25w 39.2l, Adh	1
16	1031617	(0000−)	Seal, Afmkt, Bulb, Str, .75d F/07ga 08ft	1
17	1045567	(0000−)	Angle, Mtg, Wndw, Lh	1
18	1045569	(0000−)	Angle, Mtg, Wndw, Rh	1
19	1037346	(0000−)	Screw, Hex, M8 X 1.25 X 25, 9.8, Sems	16
20	314012	(0000−)	Tape, Hook, 1.0w [Velcro]	1
21	1050255	(0000−)	Fan, Defroster, 36vdc, 07.9d	1
22	361339	(0295−)	Screw, Hex, M6 X 1.00 X 16, Fmg	4
23	1050266	(0000−)	Bracket, Mtg, Fan, Ev	1
24	55034	(0000−)	Duct, Vyl, 0.74 X 1.50 .75d Max 48.0l	1
25	361346	(0000−)	Plug, Hole, Rnd, 0.38h .3l, Plstc	5
26	1053385	(0000−)	Plug, Hole, Rnd, 1.00h .14−.25, Blk Nyl	1
27	1064184	(0000−)	Circuitbreaker, 2.5a, Resetable	1
28	75428	(0000−)	Plug, Hole, Rnd, 0.75h .03−.12, Blk Nyl	1
29	1054368	(0000−)	Plug, Hole, Rnd, 0.25h .03−.12, Blk Nyl	1
30	1050162	(0000−)	Harness, Fan, Ic [S20]	1

Fig. 5 − Cab Door Group

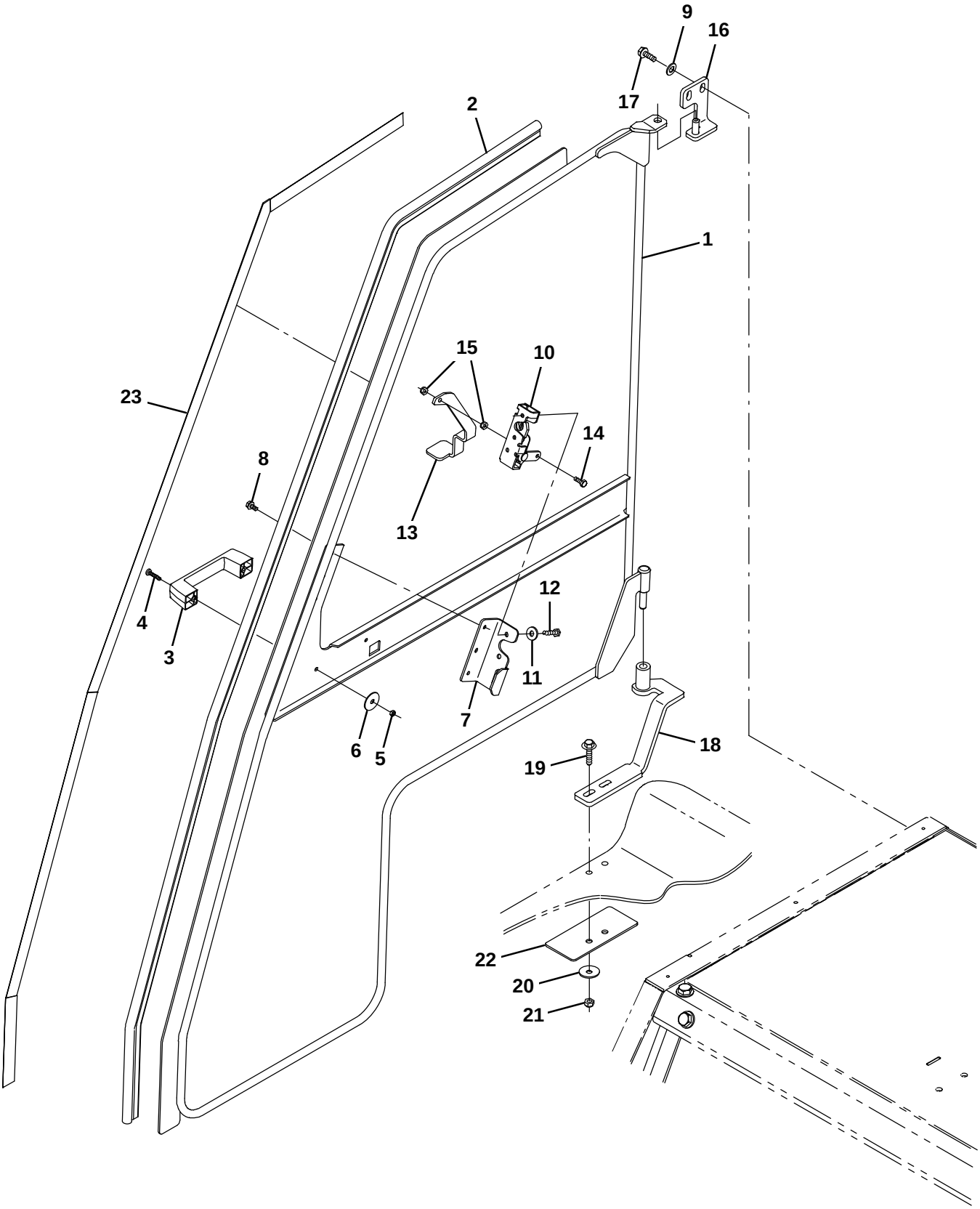

354983 − ALL

Fig. 5 − Cab Door Group

NOTE: Cab Kit (For machines equipped with OHG), Tennant Part Number 9006308, includes; Fig. 4 and Fig. 5.
NOTE: Cab Kit (including OHG), Tennant Part Number 9006306, includes; Fig. 3, Fig. 4 and Fig. 5.

Ref.	Part No.	Serial Number	Description	Qty.
1	1045404	(0000−)	Door Wldt, Cab	1
2	1048166	(0000−)	Seal, Afmkt, Bulb, Str, 0.58D 08Ft	1
3	1023920	(0000−)	Handle, Door	1
4	06935	(0000−)	Screw, Pan, Phl, M5 X 0.80 X 25, 4.8	2
5	06549	(0000−)	Nut, Hex, Lock, M5 X 0.80, Nl	2
6	41178	(0000−)	Washer, Flat, 0.25, Fendr	4
7	1052808	(0000−)	Angle, Mtg, Latch	1
8	74455	(0000−)	Screw, Hex, M6 X 1.00 X 12, Fmg	3
9	32485	(0000−)	Washer, Flat, 0.38, Sae	3
10	59661	(0000−)	Latch	1
11	41186	(0000−)	Washer, Flat, Belleville, .31	2
12	25046	(0000−)	Screw, Hex, .25−20 X 1.00, G5	2
13	1053068	(0000−)	Bracket, Latch, Door	1
14	06942	(0000−)	Screw, Hex, M6 X 1.00 X 16, 8.8	1
15	08708	(0000−)	Nut, Hex, Lock, M6 X 1.00, Nl	2
16	1049687	(0000−)	Angle Wldt, Mtg, Door	1
17	763045	(0000−)	Screw, Hex, M8 X 1.25 X 20, Fmg	2
18	1047728	(0000−)	Bracket Wldt, Mtg, Door	1
19	1037355	(0000−)	Screw, Hex, M8 X 1.25 X 35, 9.8, Sems	2
20	30013	(0000−)	Washer, Flat, 0.31, Fendr	2
21	08709	(0000−)	Nut, Hex, Lock, M8 X 1.25, Nl	2
22	1048161	(0000−)	Plate, Sppt, Hinge	1
23	314012	(0000−)	Tape, Hook, 1.0w [Velcro]	1

Fig. 6 − Corner Bumper Kit

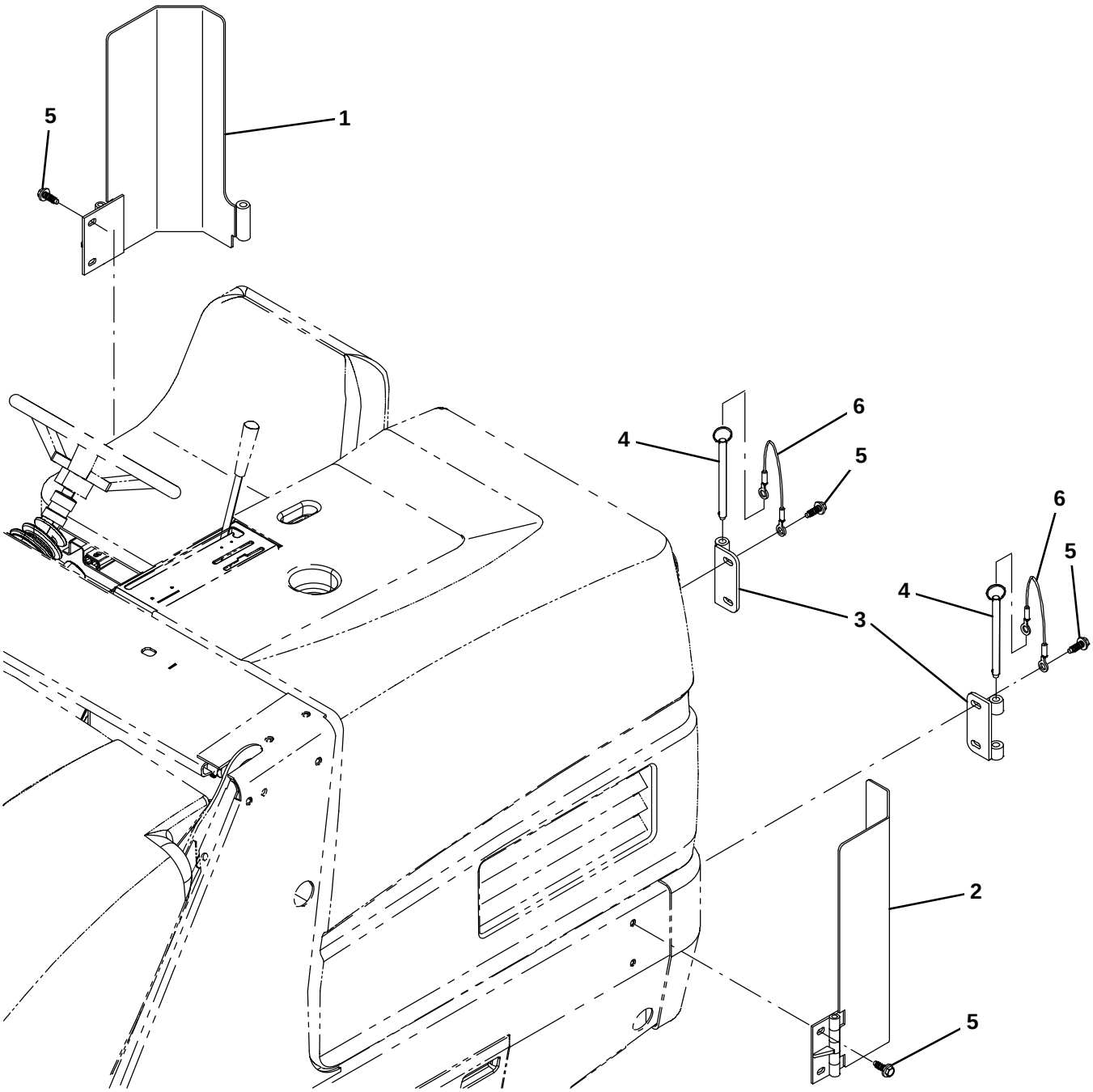

354973 − ALL

Fig. 6 − Corner Bumper Kit

	Ref.	Part No.	Serial Number	Description	Qty.
▽		9006021	(0000−)	Bumper Kit, Corner, Rear, Ci [S20]	1
▲	1	1047115	(0000−)	Angle Wldt, Bmpr, Tower, Rh	1
▲	2	1047116	(0000−)	Angle Wldt, Bmpr, Tower, Lh	1
▲	3	1048408	(0000−)	Bracket Wldt, Mtg, Bmpr	2
▲	4	1043176	(0000−)	Pin, Hitch, .500d X 6.00l, Pl	2
▲	5	1037358	(0000−)	Screw, Hex, M10 X 1.50 X 35, 9.8, Sems	8
▲	6	87172	(0000−)	Cable, Glv .13d 010.0l .52eye /.52eye	2

Fig. 7 − Dual Side Brush Lift Group, LH

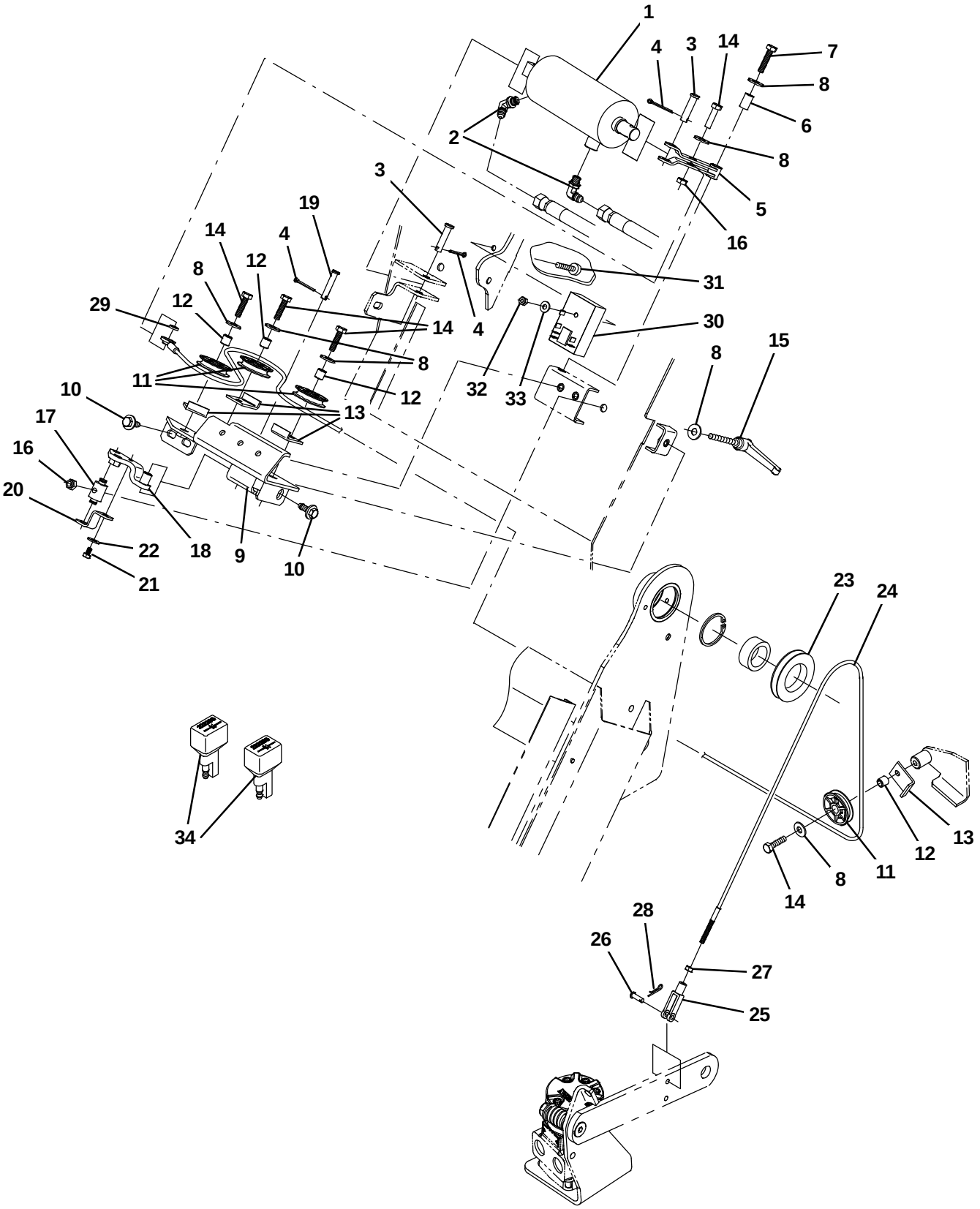

354991 − E

Fig. 7 − Dual Side Brush Lift Group, LH

NOTE: Dual Side Brush Kit, Tennant Part Number 9006041, includes; Fig. 7, Fig. 8, Fig. 9, Fig. 10 and Fig. 11.

Ref.	Part No.	Serial Number	Description	Qty.
1	1048556	(0000−)	Cyl, Hyd, 2.5b 9.0l 01.50strk, 2500	1
2	77097	(0000−0820)	Fitting, Hyd, E90, Jm04/Om04	2
2	762427	(0821−)	Fitting, Hyd, E90, Fm04/Om04	2
3	29558	(0000−)	Pin, Clevis, 0.37d X 1.50l	2
4	08175	(0000−)	Pin, Cotter, .125 X 1.25	3
5	1045647	(0000−)	Pivot Wldt	1
6	51562	(0000−)	Tube, 0.33id 0.51od 00.8l, Stl, Pl	1
7	06955	(0000−)	Screw, Hex, M8 X 1.25 X 35, 8.8	1
8	32491	(0000−)	Washer, Flat, 0.31, Std	7
9	1045563	(0000−)	Plate Wldt	1
10	1037346	(0000−)	Screw, Hex, M8 X 1.25 X 25, 9.8, Sems	3
11	369781	(0000−)	Pulley, Cable, 1.5d Nyl	4
12	222460	(0000−)	Sleeve, P/M, 0.32b 0.50d 0.5l [430ss]	4
13	54400	(0000−)	Bracket, Angle, Keeper, Cable	4
14	76570	(0000−)	Screw, Hex, M8 X 1.25 X 30, 8.8	5
15	360414	(0000−)	Lever, Adj, Metal	1
16	08709	(0000−)	Nut, Hex, Lock, M8 X 1.25, Nl	2
17	71126	(0000−)	Block, Adj, Pivot	1
18	1045571	(0000−)	Pivot Wldt, Sba	1
19	397249	(0000−)	Pin, Clevis, 0.31d X 1.62l	1
20	1045475	(0000−)	Angle, Bottom	1
21	06941	(0000−)	Screw, Hex, M6 X 1.00 X 10, 8.8	1
22	32490	(0000−)	Washer, Flat, 0.25, Std	1
23	360077	(0000−)	Pulley, Cable, 3.0d 1.76b, .25d Cable	1
24	1046498	(0000−)	Cable, Ss .12d 89.0l .55eye / M6−1.0	1
25	1035826	(0000−)	Clevis, Adj, M6 Pin, M6 X 1.0 Rh, Pl	1
26	14605	(0000−)	Pin, Clevis, 0.25d X 0.75l	1
27	07785	(0000−)	Nut, Hex, Std, M6 X 1.00, Ss	1
28	08085	(0000−)	Pin, Cotter, Hair, 0.31D .058 Wir	1
29	360801	(0000−)	Sleeve, 0.32b 0.50d 0.3l, 2cham, Ss	1
30	1046038	(0000−)	Timer, 36vdc, 10a [Left Hand Side Brush]	1
31	32747	(0000−)	Screw, Pan, Phl, M6 X 1.00 X 40, Ss	1
32	08708	(0000−)	Nut, Hex, Lock, M6 X 1.00, Nl	1
33	32483	(0000−)	Washer, Flat, 0.25, Sae	1
34	222290	(0000−)	Diode, Ele, Plug	2

Fig. 8 − Dual Side Brush Motor and Pivot Group, LH

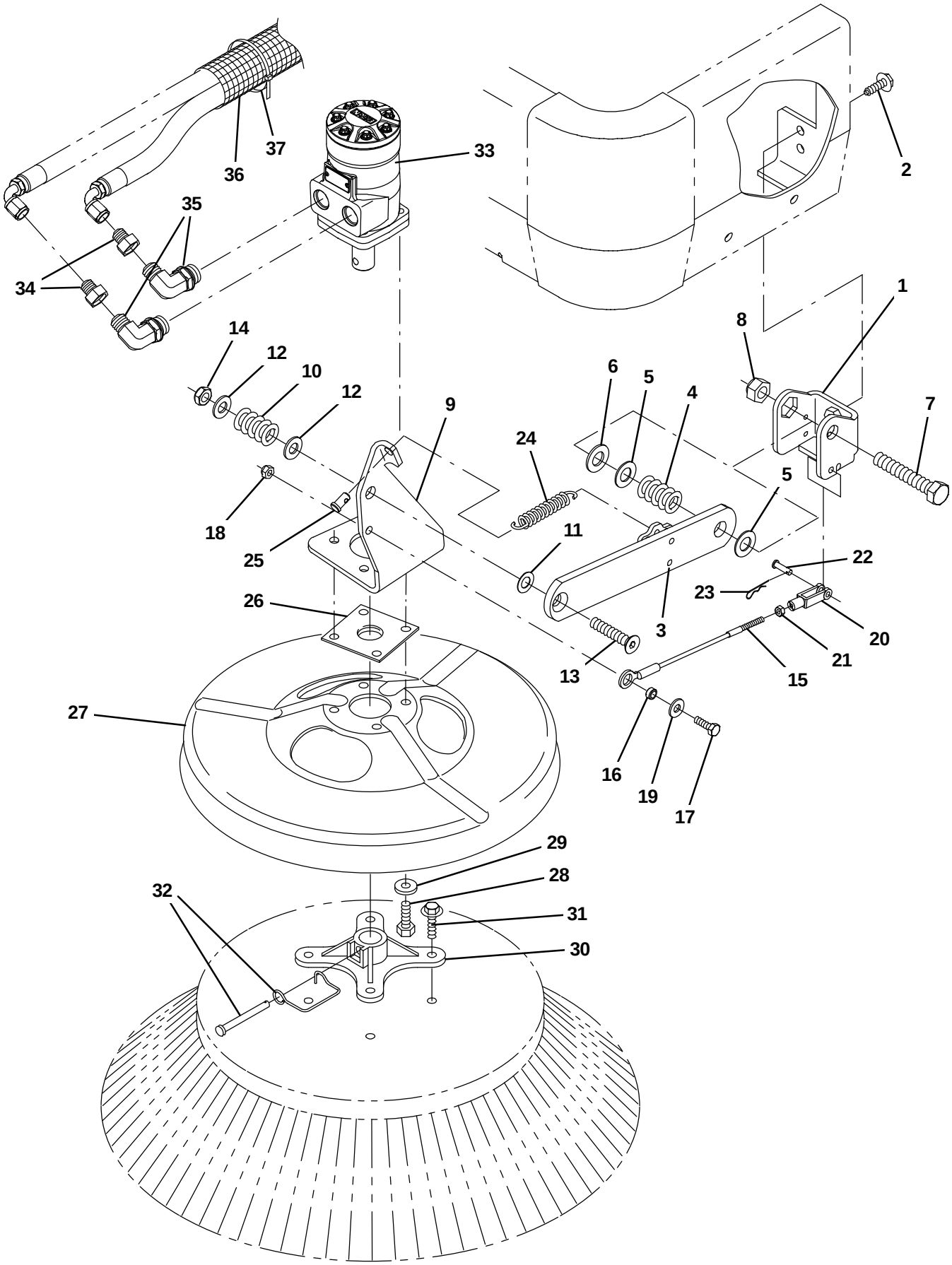

354992 − E

Fig. 8 − Dual Side Brush Motor and Pivot Group, LH

NOTE: Dual Side Brush Kit, Tennant Part Number 9006041, includes; Fig. 7, Fig. 8, Fig. 9, Fig. 10 and Fig. 11.

Ref.	Part No.	Serial Number	Description	Qty.
1	1042727	(0000−)	Bracket, Sidebrush, Lh	1
2	1037358	(0000−)	Screw, Hex, M10 X 1.50 X 35, 9.8, Sems	2
3	1042730	(0000−)	Arm Wldt, Lift, Lh	1
4	360081	(0000−)	Spring, Dsl, 1.25od 0.62id 1.80l	1
5	64425	(0000−)	Washer, Thrust, 0.61b 1.25d .06, Fgl	2
6	15331	(0000−)	Washer, Flat, 0.62, Sae	1
7	06988	(0000−)	Screw, Hex, M16 X 2.00 X 90, 8.8	1
8	33342	(0000−)	Nut, Hex, Lock, M16 X 2.00, Nl	1
9	1046248	(0000−)	Bracket, Mtg, Motor, Lh	1
10	360357	(0000−)	Spring, Dsl, 1.00od 0.50id 1.25l	1
11	59633	(0000−)	Washer, Thrust, 0.53b 1.00d 0.03w[Fbrgl]	1
12	32486	(0000−)	Washer Flat,0.50,Sae	2
13	27108	(0000−)	Screw, Flt, Soc, .50−13 X 2.50, Al	1
14	86029	(0000−)	Nut, Hex, Flexlock, .50−13, Thin	1
15	1048311	(0000−)	Cable, Ss .19d 008.5l .55eye / M6−1.0	1
16	360801	(0000−)	Sleeve, 0.32b 0.50d 0.3l, 2cham, Ss	1
17	09010	(0000−)	Screw, Hex, M8 X 1.25 X 25, Ss	1
18	08713	(0000−)	Nut, Hex, Lock, M8 X 1.25, Nl, Ss	1
19	01685	(0000−)	Washer, Flat, 0.38b 0.88d .08, Ss	1
20	1035826	(0000−)	Clevis, Adj, M6 Pin, M6 X 1.0 Rh, Pl	1
21	07785	(0000−)	Nut, Hex, Std, M6 X 1.00, Ss	1
22	14605	(0000−)	Pin, Clevis, 0.25d X 0.75l	1
23	08085	(0000−)	Pin, Cotter, Hair, 0.31d .058 Wir	1
24	29499	(0000−)	Spring, Extn, 0.75od 0.11wir 04.5l	1
25	41305	(0000−)	Pin, Clevis, 0.37d X 0.75l	1
26	16082	(0000−)	Guard, String, Motor, Brush	1
27	1054256	(0000−)	Guard, Brush	1
28	46559	(0000−)	Screw, Hex, .38−16 X 1.25, Nl	4
29	32492	(0000−)	Washer, Flat, 0.38, Std	4
30	47501	(0000−)	Hub, Adapter, Brush, 1.00b	1
31	39396	(0000−)	Screw, Hex, .31−12 X 1.50, Fmg [Ab]	4
32	84581	(0000−)	Pin Assy, Side Brush W/ Clip	1
33	361026	(0000−0534)	Motor, Hyd, Gear, Int 08.9 Bi−Dir 1500 (See Breakdown)	2
33	1068803	(0535−)	Motor, Hyd, Gear, Int 08.9 Bi−Dir 1500	2
34	47753	(0000−0820)	Fitting, Hyd, Str, Jf08/Jm06	2
34	762458	(0821−)	Fitting, Hyd, Str, Ff08/Fm06	2
35	56821	(0000−0820)	Fitting, Hyd, E90, Jm08/Om10	2
35	767411	(0821−)	Fitting, Hyd, E90, Fm08/Om10	2
36	31646	(0000−)	Sleeve, Nyl, 1.63id 25.0l	1
37	49266	(0000−)	Tie, Cable, Nyl, 07.3l .19w 1.8 Max D	1

Fig. 9 − Dual Side Brush Wire Harness Group

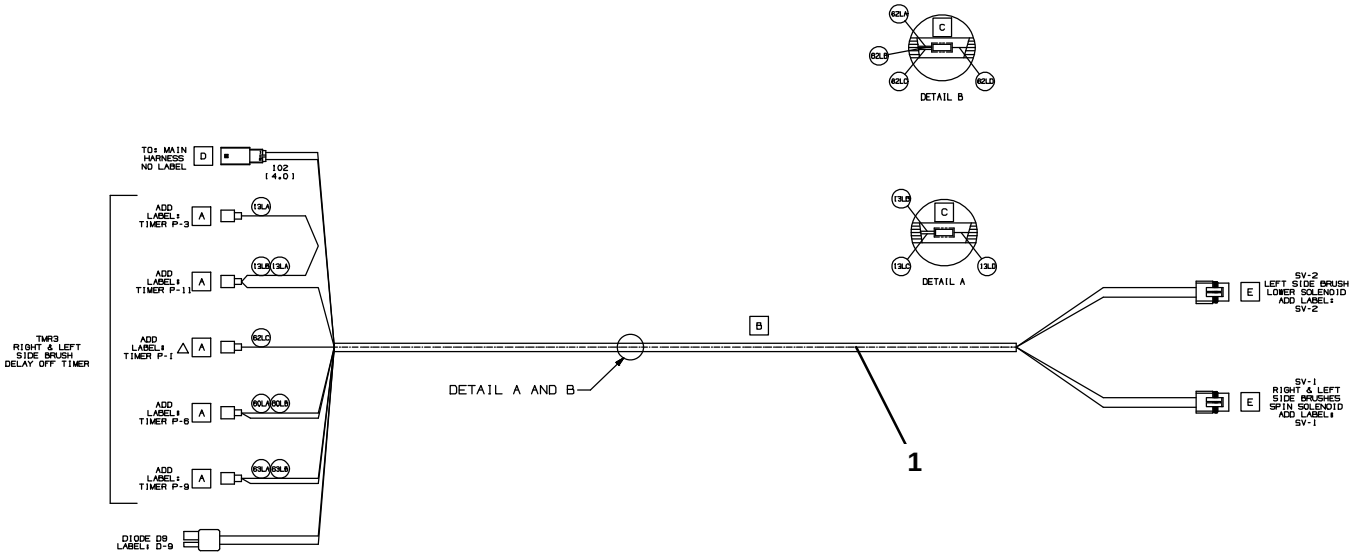

354993 − IC

NOTE: Dual Side Brush Kit, Tennant Part Number 9006041, includes; Fig. 7, Fig. 8, Fig. 9, Fig. 10 and Fig. 11.

Ref.	Part No.	Serial Number	Description	Qty.
1	1050070	(0000−)	Harness, Brush, Side, Lh, 36Vdc [S20]	1

Fig. 10 − Dual Side Brush Hydraulic Valve Group

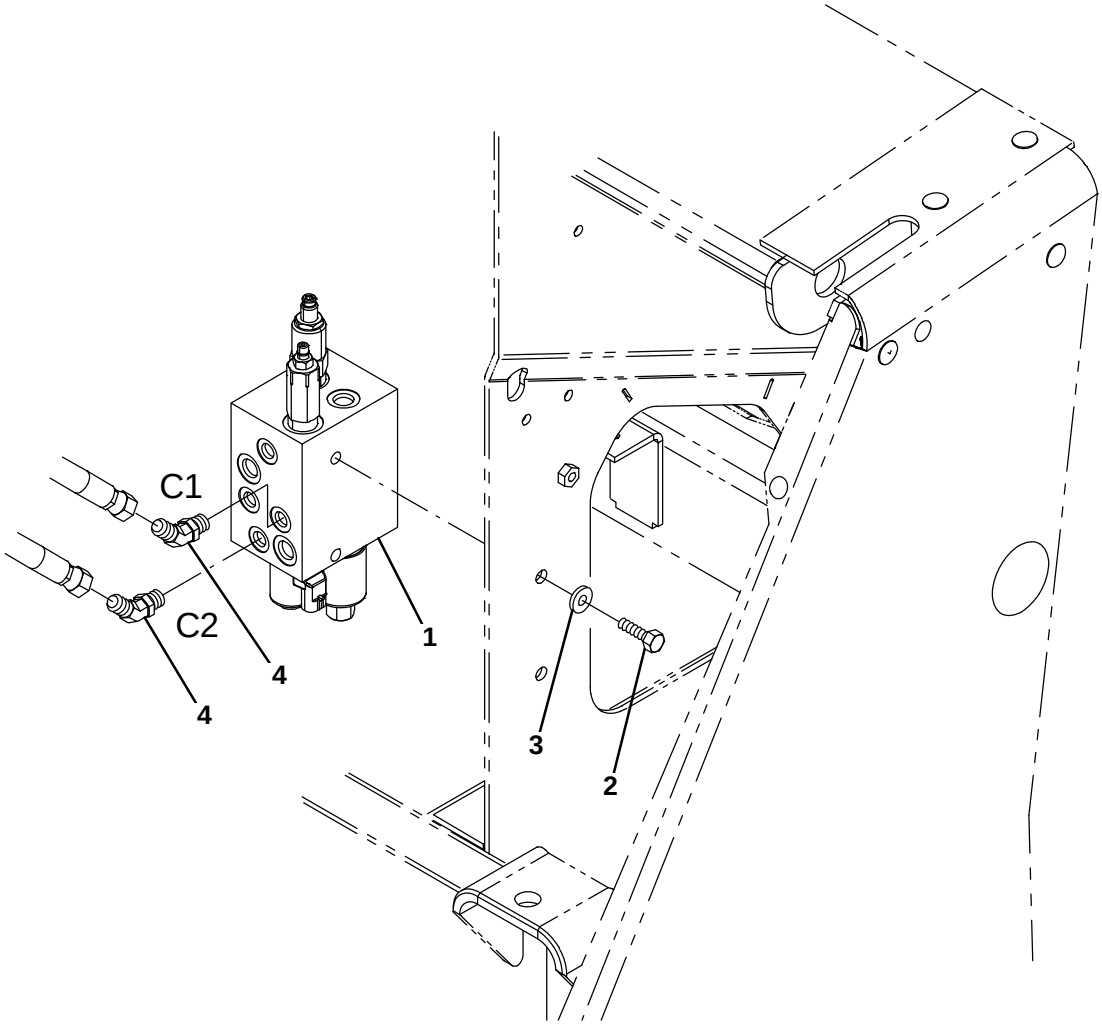

356018 − E

NOTE: Dual Side Brush Kit, Tennant Part Number 9006041, includes; Fig. 7, Fig. 8, Fig. 9, Fig. 10 and Fig. 11.

Ref.	Part No.	Serial Number	Description	Qty.
1	1045994	(0000−)	Valve, Hyd, Solenoid, 36Vdc	1
2	06961	(0000−)	Screw, Hex, M10 X 1.50 X 20, 8.8	2
3	32492	(0000−)	Washer, Flat, 0.38, Std	2
4	34359	(0000−0820)	Fitting, Hyd, E45, Jm04/Om04	2
4	79874	(0821−)	Fitting, Hyd, E45, Fm04/Om04	2

Fig. 11 − Dual Side Brush Hydraulic Hose Diagram

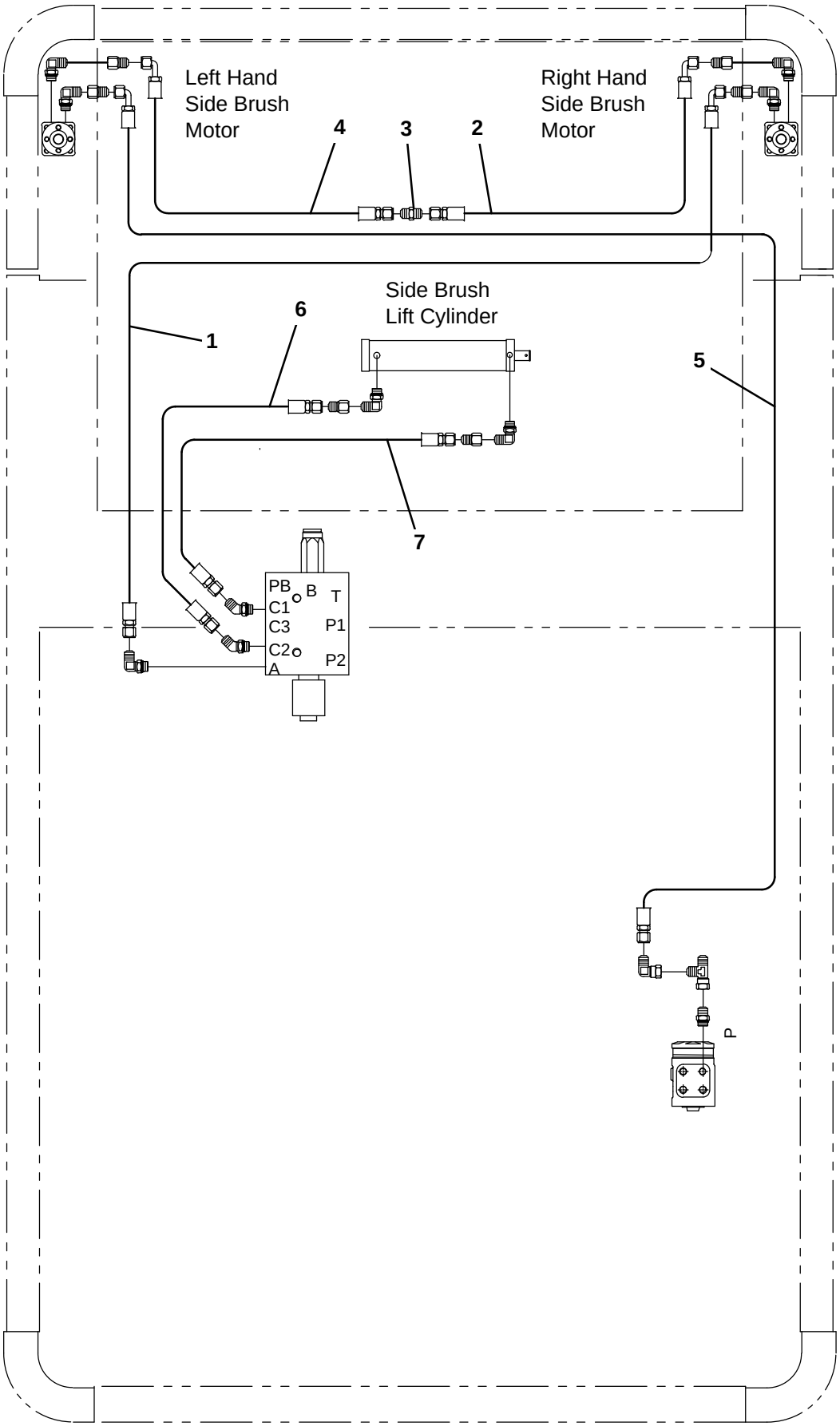

356019 − E

Fig. 11 − Dual Side Brush Hydraulic Hose Diagram

NOTE: Dual Side Brush Kit, Tennant Part Number 9006041, includes; Fig. 7, Fig. 8, Fig. 9, Fig. 10 and Fig. 11.

Ref.	Part No.	Serial Number	Description	Qty.
1	02469	(0000−0820)	Hose, Hyd, Med06, Jf06e90/Jf06str, 100.0	1
1	1071774	(0821−)	Hose, Hyd, Med06, Of06e90/Of06str, 100.0	1
2	31597	(0000−0820)	Hose, Hyd, Med06, Jf06e90/Jf06str, 068.0	1
2	1071776	(0821−)	Hose, Hyd, Med06, Of06e90/Of06str, 068.0	1
3	15803	(0000−0820)	Fitting, Hyd, Str, Jm06/Jm06	1
3	762443	(0821−)	Fitting, Hyd, Str, Fm06/Fm06 Bh	1
4	1041941	(0000−0820)	Hose, Hyd, Tc06, Jf06e90/Jf06str, 086.0	1
4	1071940	(0821−)	Hose, Hyd, Tc06, Of06e90/Of06str, 086.0	1
5	1052533	(0000−0820)	Hose, Hyd, Tc06, Jf06e90/Jf06str, 096.0	1
5	1071943	(0821−)	Hose, Hyd, Tc06, Of06e90/Of06str, 086.0	1
6	1052534	(0000−0820)	Hose, Hyd, Tc04, Jf04str/Jf04str, 028.0	1
6	1071941	(0821−)	Hose, Hyd, Tc04, Of04str/Of04str, 028.0	1
7	1025992	(0000−0820)	Hose, Hyd, Tc04, Jf04str/Jf04str, 020.0	1
7	1071942	(0821−)	Hose, Hyd, Tc04, Of04str/Of04str, 020.0	1

Fig. 12 − Side Brush Dust Control Kit

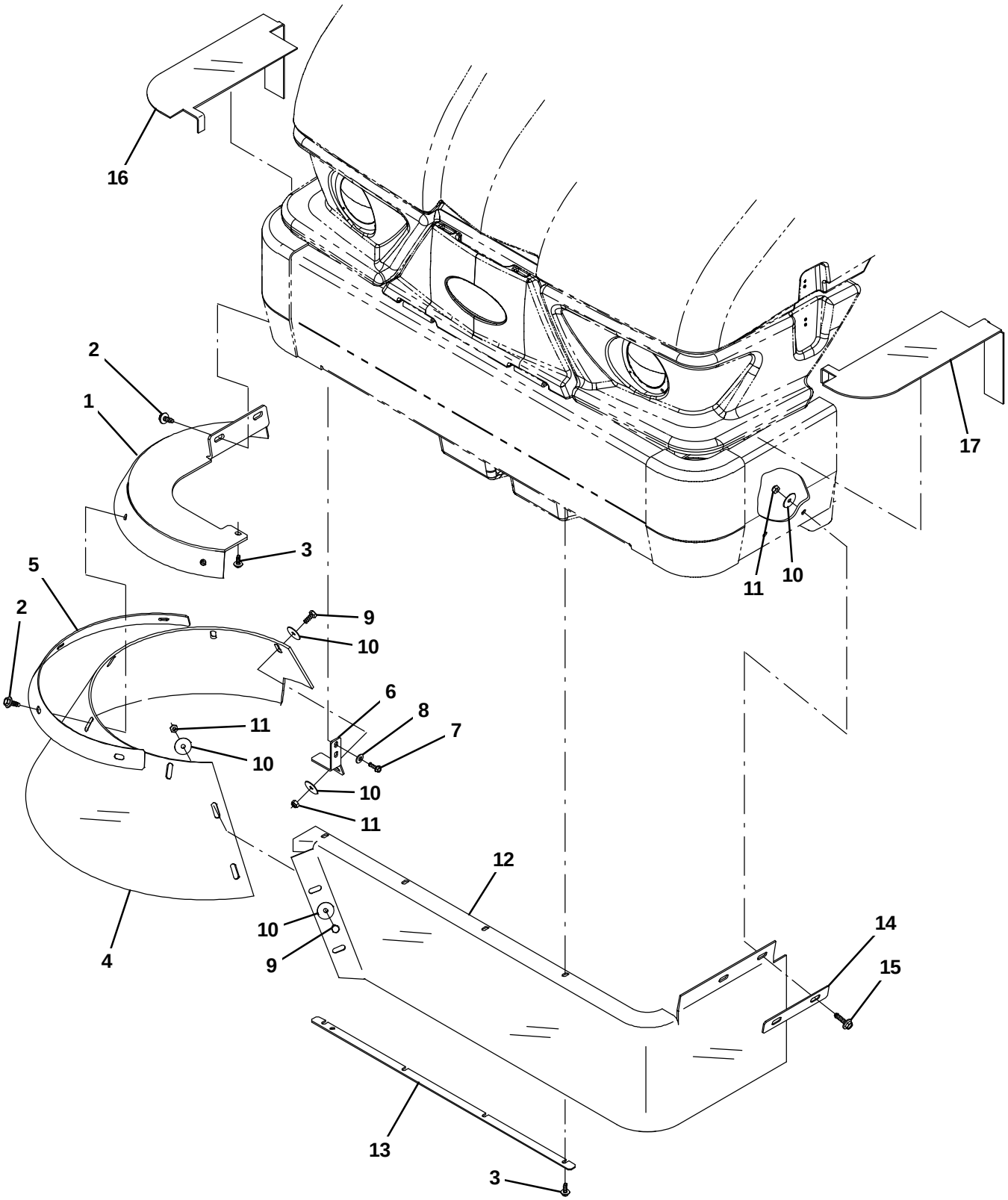

354969 − ALL

Fig. 12 − Side Brush Dust Control Kit

	Ref.	Part No.	Serial Number	Description	Qty.
▽		9006013	(0000−)	Sbdc Kit, W/O Lh Side Brush, Ci [S20]	1
▲	1	1054371	(0000−)	Support Wldt, Rh, Sbdc	1
▲	2	1037346	(0000−)	Screw, Hex, M8 X 1.25 X 25, 9.8, Sems	6
▲	3	1040467	(0000−)	Screw, Hex, M6 X 1.00 X 20, 9.8, Sems	5
▲	4	1054391	(0000−)	Skirt, Brush, Side, Sbdc	1
▲	5	1054567	(0000−)	Retainer, Skirt	1
▲	6	1047696	(0000−)	Bracket, Sbdc, Rh	1
▲	7	12459	(0000−)	Screw, Hex, M6 X 1.00 X 20, Fmg	2
▲	8	32490	(0000−)	Washer, Flat, 0.25, Std	2
▲	9	09740	(0000−)	Screw, Hex, M8 X 1.25 X 20, Ss	3
▲	10	30013	(0000−)	Washer, Flat, 0.31, Fendr	8
▲	11	08709	(0000−)	Nut, Hex, Lock, M8 X 1.25, Nl	5
▲	12	1054625	(0000−)	Skirt, Brush, Side, Sbdc [W/O Lhsb]	1
▲	13	1048720	(0000−)	Retainer, Skirt	1
▲	14	1048883	(0000−)	Retainer, Skirt	1
▲	15	1037355	(0000−)	Screw, Hex, M8 X 1.25 X 35, 9.8, Sems	2
▲	16	1047773	(0000−)	Seal, Top, Sbdc	1
▲	17	1054369	(0000−)	Seal, Top, Lh, Sbdc	1

Fig. 13 − Dual Side Brush Dust Control Kit

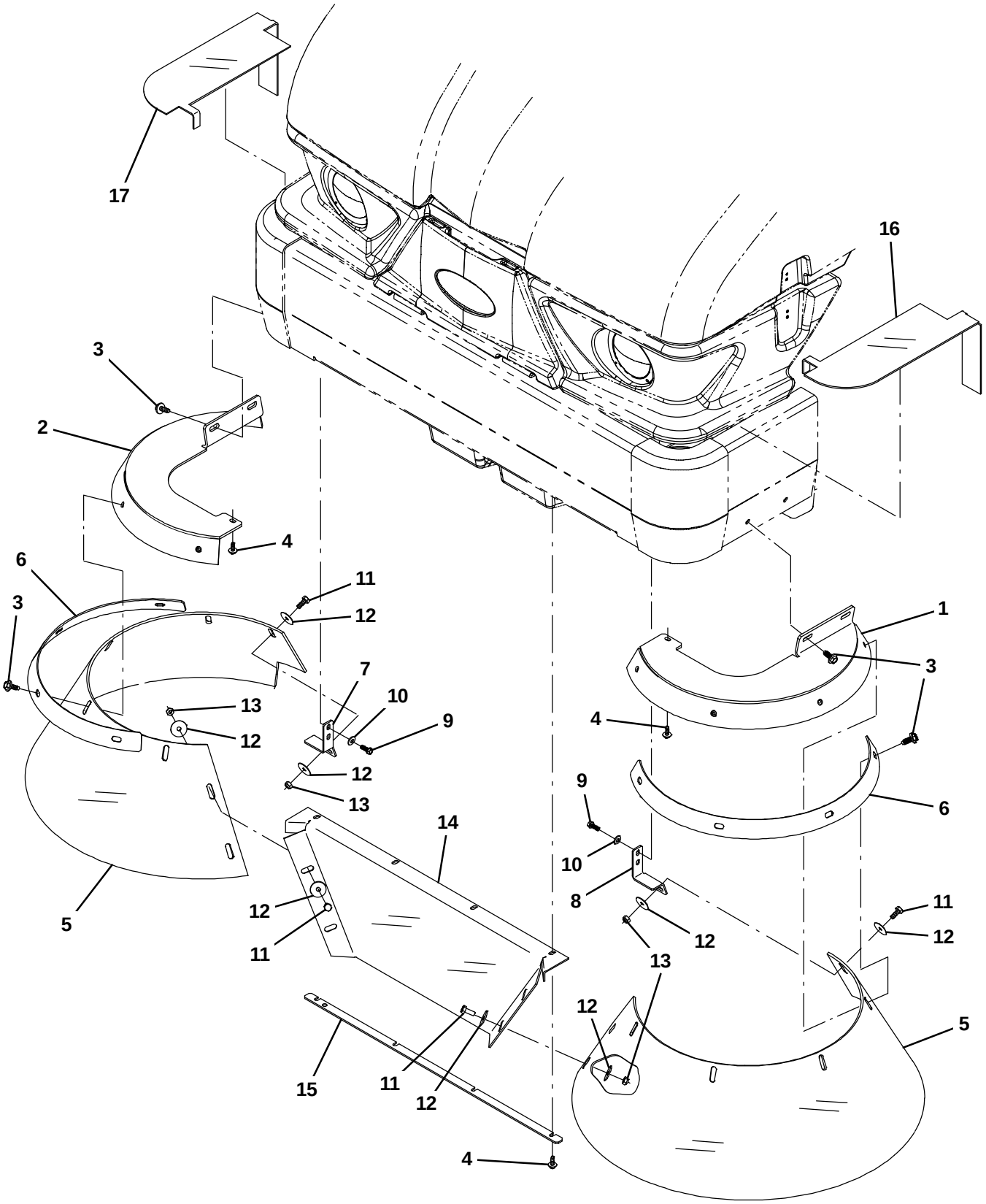

354971 − E

Fig. 13 − Dual Side Brush Dust Control Kit

	Ref.	Part No.	Serial Number	Description	Qty.
▽		9006014	(0000−)	Brush Kit, Side, Dual, Ele,Ci[S20 Affil]	1
▲	1	1054374	(0000−)	Support Wldt, Lh, Sbdc	1
▲	2	1054371	(0000−)	Support Wldt, Rh, Sbdc	1
▲	3	1037346	(0000−)	Screw, Hex, M8 X 1.25 X 25, 9.8, Sems	12
▲	4	1040467	(0000−)	Screw, Hex, M6 X 1.00 X 20, 9.8, Sems	6
▲	5	1054391	(0000−)	Skirt, Brush, Side, Sbdc	2
▲	6	1054567	(0000−)	Retainer, Skirt	2
▲	7	1047696	(0000−)	Bracket, Sbdc, Rh	1
▲	8	1048785	(0000−)	Bracket, Sbdc, Lh	1
▲	9	12459	(0000−)	Screw, Hex, M6 X 1.00 X 20, Fmg	4
▲	10	32490	(0000−)	Washer, Flat, 0.25, Std	4
▲	11	09740	(0000−)	Screw, Hex, M8 X 1.25 X 20, Ss	6
▲	12	30013	(0000−)	Washer, Flat, 0.31, Fendr	12
▲	13	08709	(0000−)	Nut, Hex, Lock, M8 X 1.25, Nl	6
▲	14	1048718	(0000−)	Skirt, Sbdc, Sba, Lh	1
▲	15	1048720	(0000−)	Retainer, Skirt	1
▲	16	1054369	(0000−)	Seal, Top, Lh, Sbdc	1
▲	17	1047773	(0000−)	Seal, Top, Sbdc	1

Fig. 14 − Vacuum Wand Kit

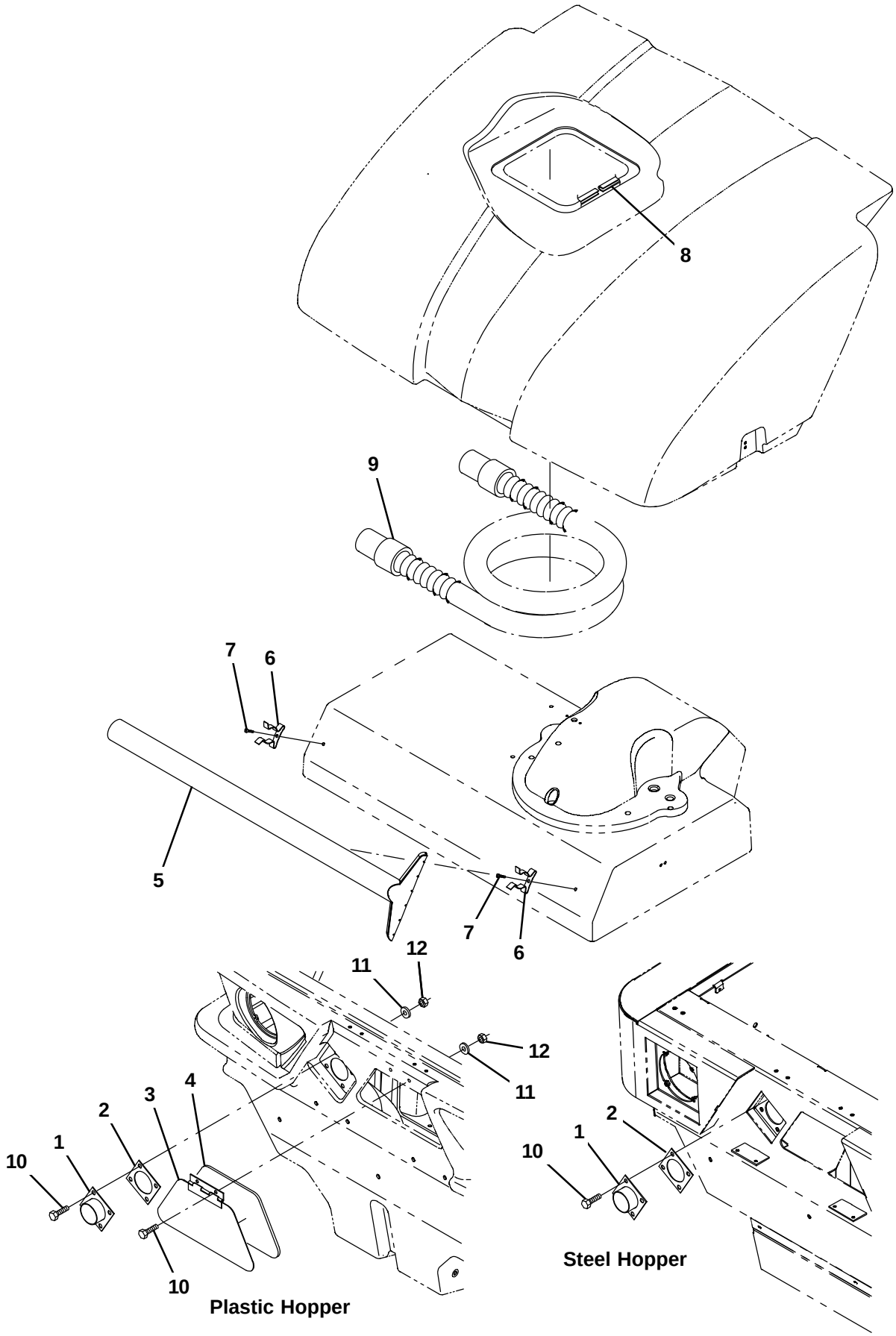

354972 − ALL

Fig. 14 − Vacuum Wand Kit

	Ref.	Part No.	Serial Number	Description	Qty.
▽		9006023	(0000−)	Wand Kit, Vacuum, Ci [S20]	1
▲	1	1052620	(0000−)	Adapter Wldt, Wand, Vacuum	1
▲	2	55965	(0000−)	Seal, Rbr, 0.06, Tube, Vacuum Wand	1
▲	3	1047632	(0000−)	Door Wldt, Wand, Vacuum	1
▲	4	1047635	(0000−)	Gasket, Door, Wand, Vacuum	1
▲	5	9006910	(0000−)	Wand, Vacuum, W/ Label, Ce [S20]	1
▲	6	67004	(0000−)	Clip, Grip, Finger, 1.00−1.88d,White Vyl	2
▲	7	360973	(0000−)	Screw, Pan, 12−16 X 0.50, F/ Plstc	2
▲	8	07887	(0000−)	Molding, Trim, Pvc, .08−.11 39.2l	1
▲	9	54009	(0000−)	Hose Assy, W/2cuff, 2.0d 120l 2.0/2.0	1
▲	10	08716	(0000−)	Screw, Hex, M6 X 1.00 X 20, Ss	6
▲	11	32490	(0000−)	Washer, Flat, 0.25, Std	6
▲	12	08708	(0000−)	Nut, Hex, Lock, M6 X 1.00, Nl	6

Fig. 15 − Battery Charger Group

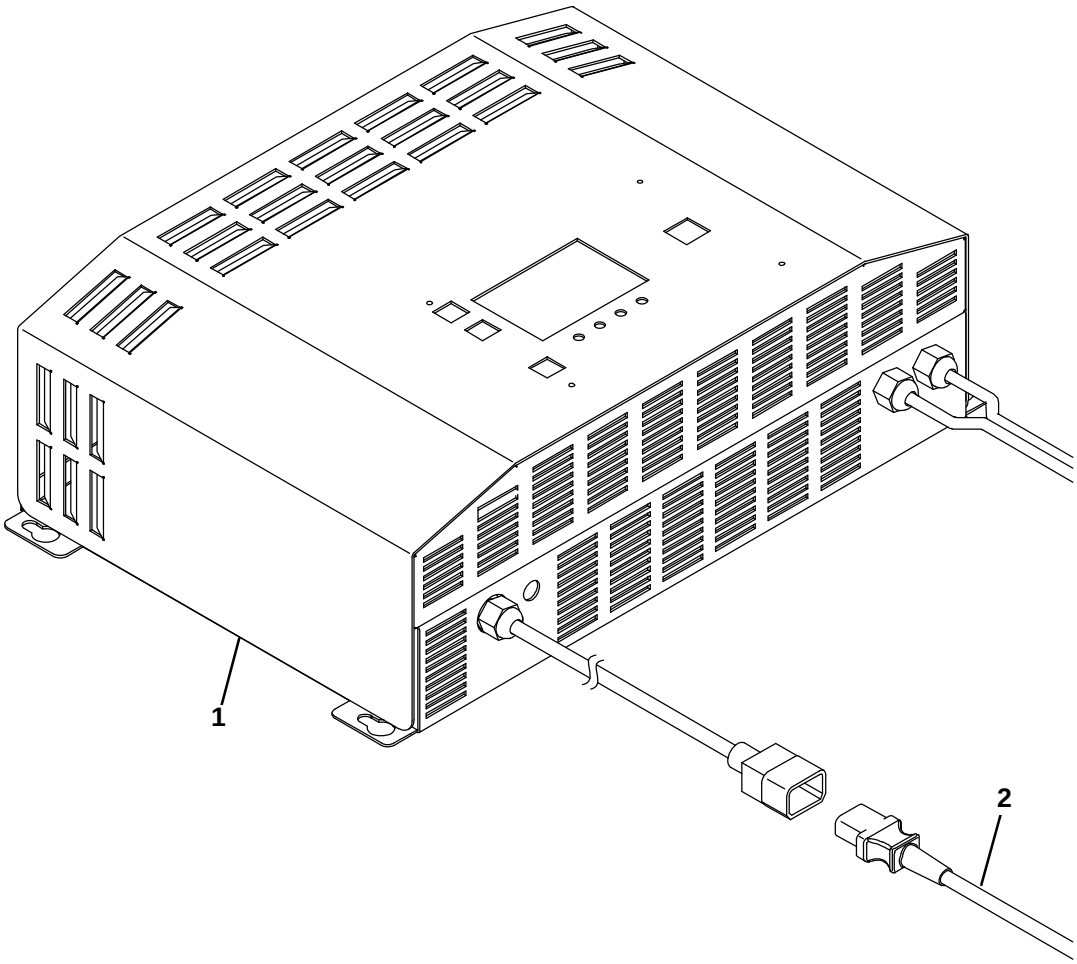

356574 − E, CE

Ref.	Part No.	Serial Number	Description	Qty.
1	1071802	(0000−)	Charger, 36vdc 045a Gel Sb175g 230vac	1
1	1071804	(0000−)	Charger, 36vdc 060a Wet Sb175g 230vac	1
1	1071805	(0000−)	Charger, 36vdc 060a Wet Sb175g 230vac Uk	1
2	1043746	(0000−)	Cable, Charger Eu, Bc5 & Bc7	1
2	1041716	(0000−)	Power Cord, Uk [Bc5,Bc7,Os|3]	1

Fig. 16 − Battery Group, 36VDC 340 AH

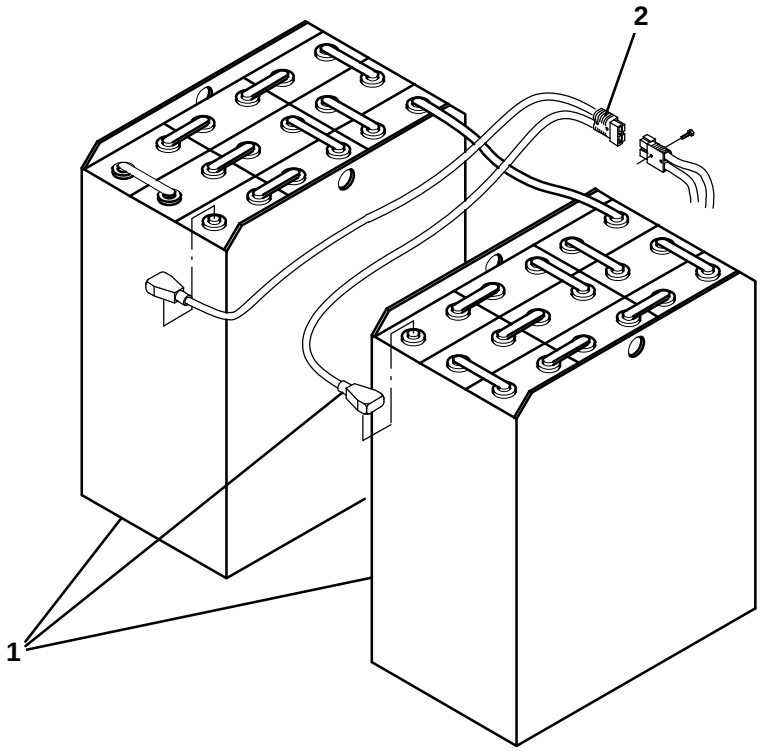

356030−E, CE

	Ref.	Part No.	Serial Number	Description	Qty.
▽		9007181	(0000−)	Battery Kit MF 36V/340Ah [S20]	1
▲▽	1	1060253	(0000−)	Battery 340 AH MF S20	2
▲▲	2	47985	(0000−)	Connector, Anderson, 175A, Orange	1

Fig. 17 − Battery Group 36V 425Ah

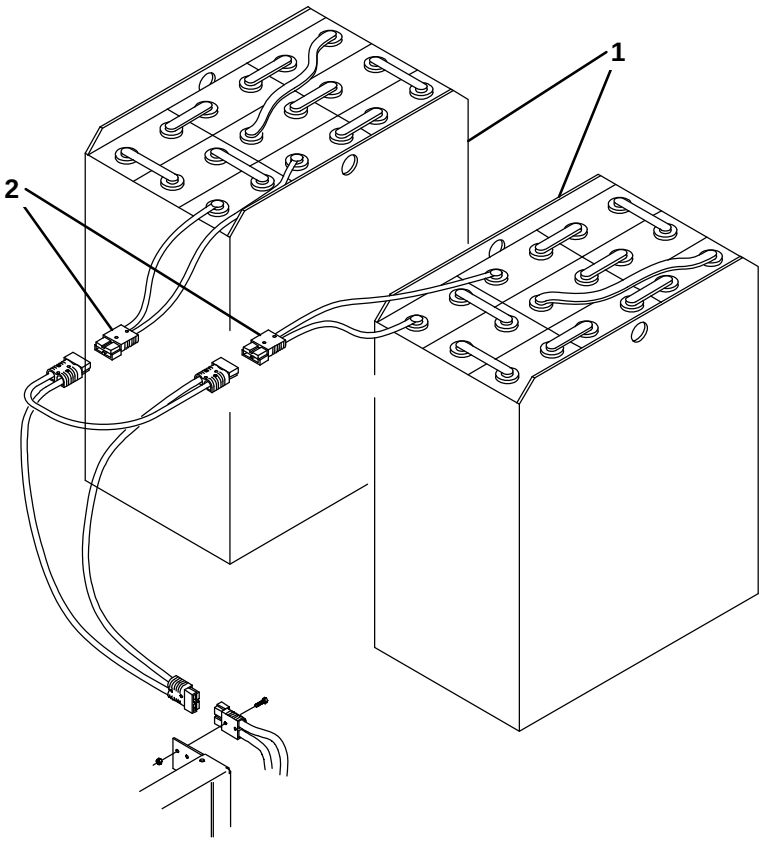

356031−E, CE

	Ref.	Part No.	Serial Number	Description	Qty.
▽		994263	(0000−)	Battery Kit Traction Tubular 36V/425Ah	1
▲▽	1	1041468	(0000−)	Battery, 36Vdc 425 Ah [Set of 2, 5 Pzb425]	2
▲▲	2	47985	(0000−)	Connector, Anderson, 175A, Orange	1

Fig. 18 − Documentation Group

E

Ref.	Part No.	Serial Number	Description	Qty.
	9007206	(0000−)	Manual, Oprtr [S20 Elec, Bg Ce]	1
	9007207	(0000−)	Manual, Oprtr [S20 Elec, Cz Ce]	1
	9007208	(0000−)	Manual, Oprtr [S20 Elec, De Ce]	1
	9007209	(0000−)	Manual, Oprtr [S20 Elec, Dk Ce]	1
	9007210	(0000−)	Manual, Oprtr [S20 Elec, Ee Ce]	1
	9007211	(0000−)	Manual, Oprtr [S20 Elec, En Ce]	1
	9007212	(0000−)	Manual, Oprtr [S20 Elec, Es Ce]	1
	9007213	(0000−)	Manual, Oprtr [S20 Elec, Fi Ce]	1
	9007214	(0000−)	Manual, Oprtr [S20 Elec, Fr Ce]	1
	9007215	(0000−)	Manual, Oprtr [S20 Elec, Gr Ce]	1
	9007216	(0000−)	Manual, Oprtr [S20 Elec, Hu Ce]	1
	9007217	(0000−)	Manual, Oprtr [S20 Elec, It Ce]	1
	9007218	(0000−)	Manual, Oprtr [S20 Elec, Lt Ce]	1
	9007219	(0000−)	Manual, Oprtr [S20 Elec, Lv Ce]	1
	9007220	(0000−)	Manual, Oprtr [S20 Elec, Nl Ce]	1
	9007221	(0000−)	Manual, Oprtr [S20 Elec, No Ce]	1
	9007222	(0000−)	Manual, Oprtr [S20 Elec, Pl Ce]	1
	9007223	(0000−)	Manual, Oprtr [S20 Elec, Pt Ce]	1
	9007224	(0000−)	Manual, Oprtr [S20 Elec, Ro Ce]	1
	9007225	(0000−)	Manual, Oprtr [S20 Elec, Ru Ce]	1
	9007226	(0000−)	Manual, Oprtr [S20 Elec, Se Ce]	1
	9007227	(0000−)	Manual, Oprtr [S20 Elec, Si Ce]	1
	9007228	(0000−)	Manual, Oprtr [S20 Elec, Sk Ce]	1
	9007229	(0000−)	Manual, Oprtr [S20 Elec, Tr Ce]	1
	9007230	(0000−)	Manual, Parts [S20 Elec, En Ce]	1
	9006727	(0000−)	Video, Oprtr, Dvd [S20 En, Es, Fr]	1
	9006724	(0000−)	Manual, Service [S20 Gas/Lpg/Dsl, En]	1
	9009383	(0000−)	Instr, Use&Care, Wallchart [Ts20] (ONLINE ONLY)	1

To view, print, order, download the latest Parts manual, other language Operator manuals, and Use and Care Guides (wall charts), visit:

www.tennantco.com/manual

SECTION 4

Contents **Page**

Fig. 1 − Hydraulic Gear Motor Breakdown, 361026 . . . . . 4−2
Fig. 2 − Hydraulic Control Valve Breakdown, 361012 . . . . . 4−4
Fig. 3 − Hydraulic Steering Valve Breakdown, 74173 . . . . . 4−6
Fig. 4 − Electric Motor Breakdown, 360065 . . . . 4−7
Fig. 5 − Electric Motor Breakdown, 360175 . . . . 4−8
Fig. 6 − Hydraulic Solenoid Valve Breakdown, 1046688 . . . . . 4−9
Fig. 7 − Hydraulic Solenoid Valve Breakdown, 1045994 . . . . . 4−10

Fig. 1 − Hydraulic Gear Motor Breakdown, 361026

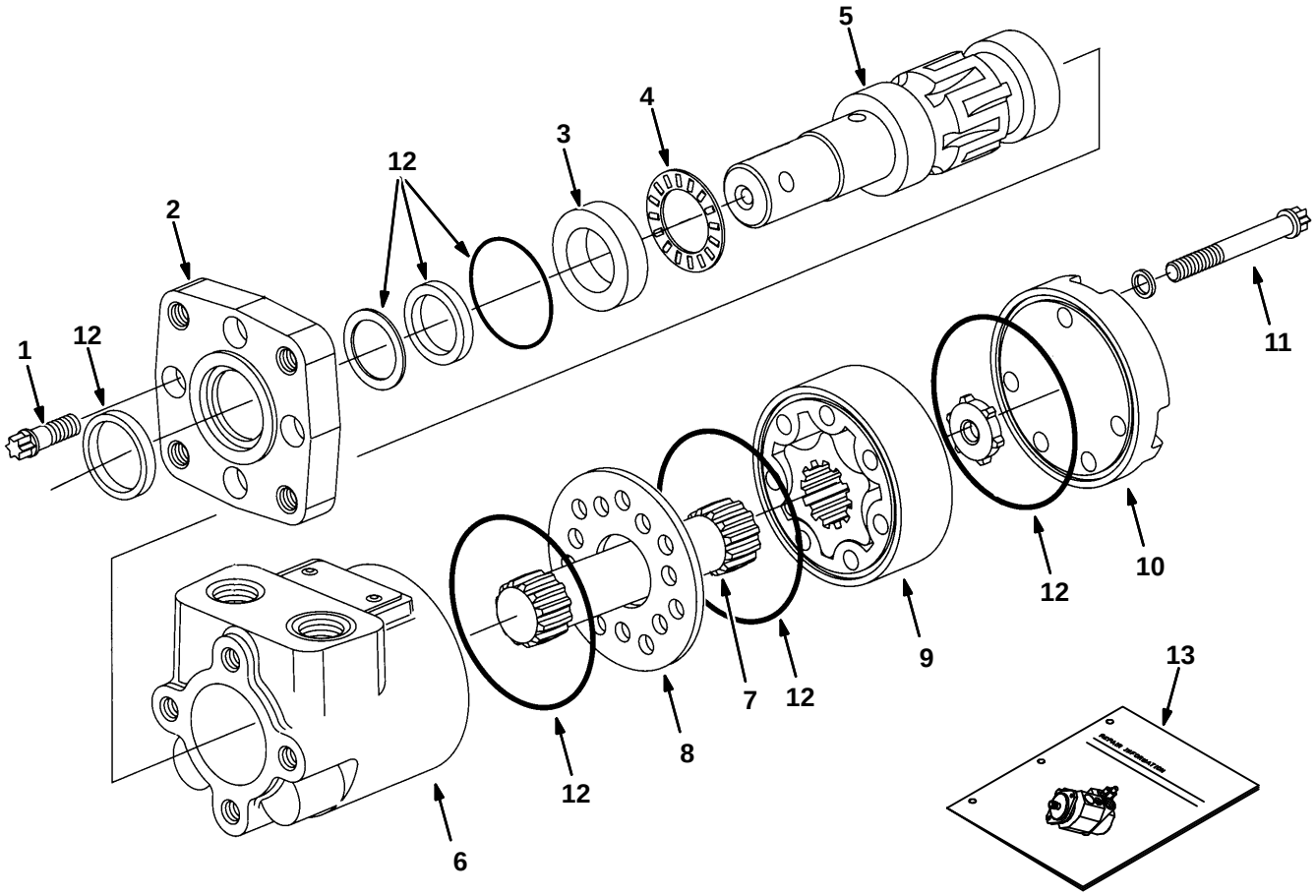

350288 − 09670 − E

Fig. 1 − Hydraulic Gear Motor Breakdown, 361026

	Ref.	Part No.	Serial Number	Description	Qty.
▽		361026	(0000−)	Motor, Hyd Gear In 08.9 B 1500	1
▲	1	37555	(0000−)	Screw	4
▲	2	31354	(0000−)	Flange Mounting	1
▲	3	16695	(0000−)	Race Thrust	1
▲	4	45628	(0000−)	Thrust Bearing	1
▲	5	31373	(0000−)	Shaft, Output	1
▲	6	74100	(0000−)	Housing	1
▲	7	21955	(0000−)	Drive	1
▲	8	74094	(0000−)	Spacer Plate	1
▲	9	21956	(0000−)	Gerotor Set	1
▲	10	65230	(0000−)	Cap, End	1
▲	11	21958	(0000−)	Cap Screw	5
▲	12	28835	(0000−)	Seal Kit, Motor A/H−Stnd	1
	13	74250	(0000−)	Instr. Repair Info, Motor	1

Fig. 2 − Hydraulic Control Valve Breakdown, 361012

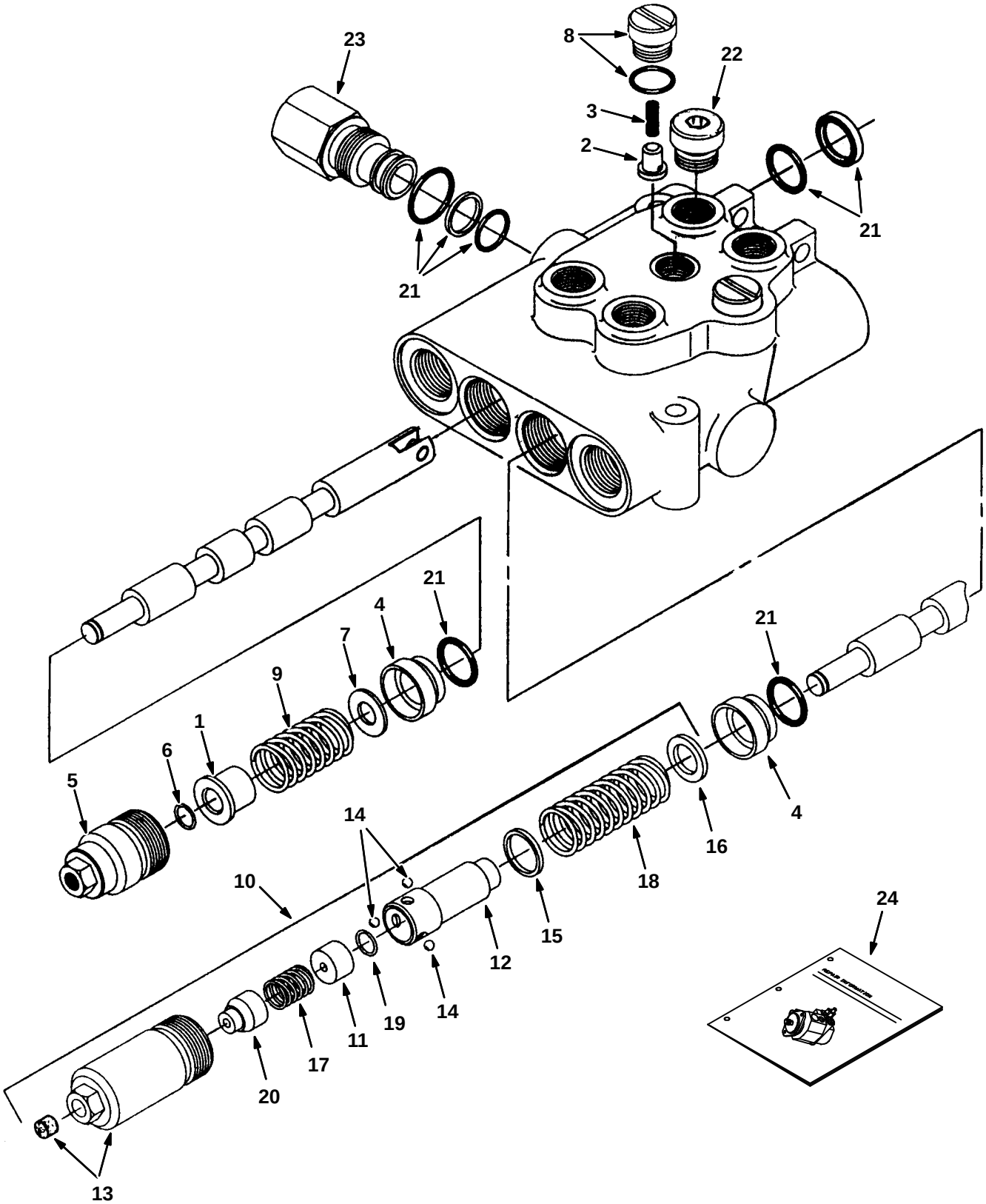

350284 − 09670 − ALL

Fig. 2 − Hydraulic Control Valve Breakdown, 361012

	Ref.	Part No.	Serial Number	Description	Qty.
▽		361012	(0000−)	Valve, Hyd Control Man	1
▲	1	79785	(0000−)	Spacer	1
▲	2	79786	(0000−)	Plunger	2
▲	3	79787	(0000−)	Spring	2
▲	4	79788	(0000−)	Bushing	2
▲	5	79789	(0000−)	Cap Assembly	1
▲	6	79792	(0000−)	Ring, Retaining	1
▲	7	79794	(0000−)	Washer	1
▲	8	79795	(0000−)	Plug & O−Ring	2
▲	9	79796	(0000−)	Spring	1
▲▽	10	79814	(0000−)	Kit, Detent In	1
▲▲	11	79801	(0000−)	Spacer	1
▲▲	12	79802	(0000−)	Detent Adaptr	1
▲▲	13	21961	(0000−)	Cap Assembly	1
▲▲	14	79804	(0000−)	Ball	3
▲▲	15	79805	(0000−)	Washer	1
▲▲	16	79806	(0000−)	Washer	1
▲▲	17	79807	(0000−)	Spring	1
▲▲	18	79808	(0000−)	Spring	1
▲▲	19	79792	(0000−)	Ring, Retaining	1
▲▲	20	79800	(0000−)	Cone	1
▲	21	79812	(0000−)	Seal Kit, Vlv	1
▲	22	13904	(0000−)	Plug Gage #6	2
	23	361028	(0000−)	Plug Assy,Byd	1
	24	79820	(0000−)	Instr. Valve Repair Info	1

Fig. 3 − Hydraulic Steering Valve Breakdown, 74173

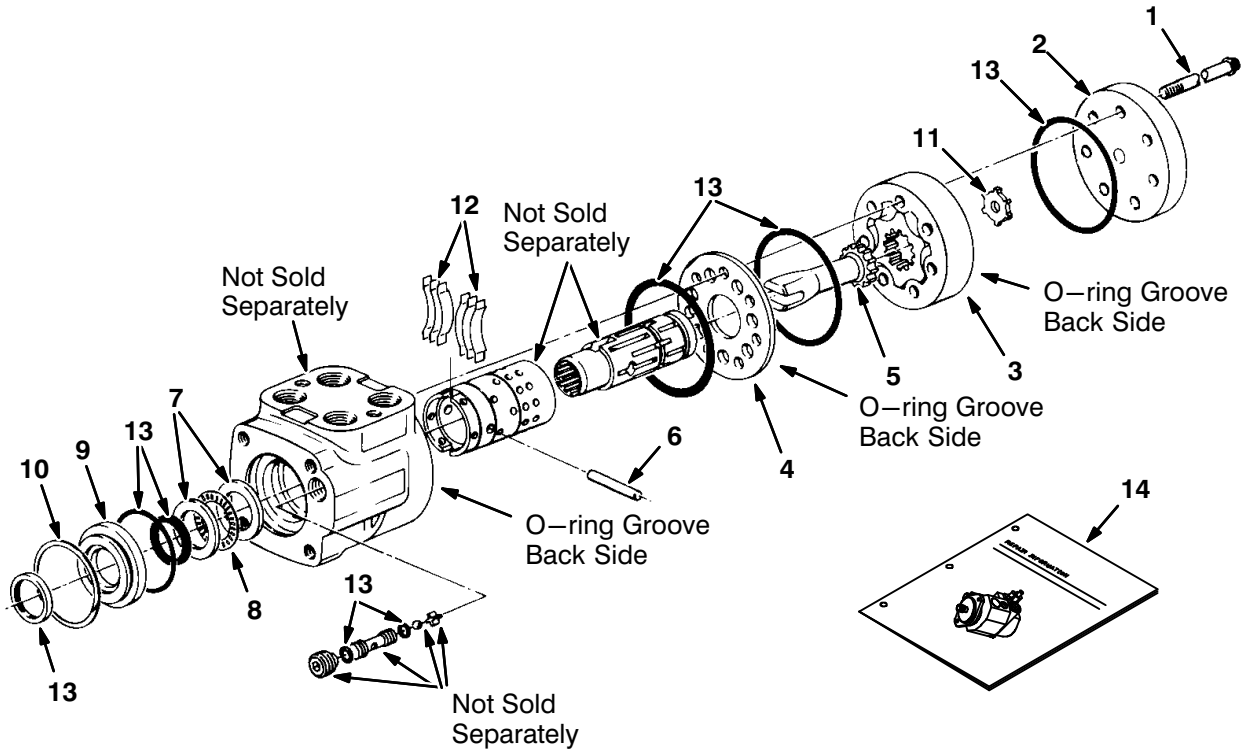

09670 − E

	Ref.	Part No.	Serial Number	Description	Qty.
▽		74173	(0000−)	Valve, Hydraulic Steering 07.3 0600	1
▲	1	74191	(0000−)	Cap, Screw	7
▲	2	74181	(0000−)	Cap, End	1
▲	3	71574	(0000−)	Gerotor Set	1
▲	4	74182	(0000−)	Plate, Wear	1
▲	5	58596	(0000−)	Drive	1
▲	6	74218	(0000−)	Pin	1
▲	7	74109	(0000−)	Race, Bearing	2
▲	8	74110	(0000−)	Bearing, Needle	1
▲	9	74112	(0000−)	Retainer, Front	1
▲	10	74111	(0000−)	Ring, Retaining	1
▲	11	74140	(0000−)	Spacer	1
▲	12	74195	(0000−)	Spring Kit	1
▲	13	74190	(0000−)	Seal Kit	1
	14	74251	(0000−)	Repair Info	1

Fig. 4 − Electric Motor Breakdown, 360065

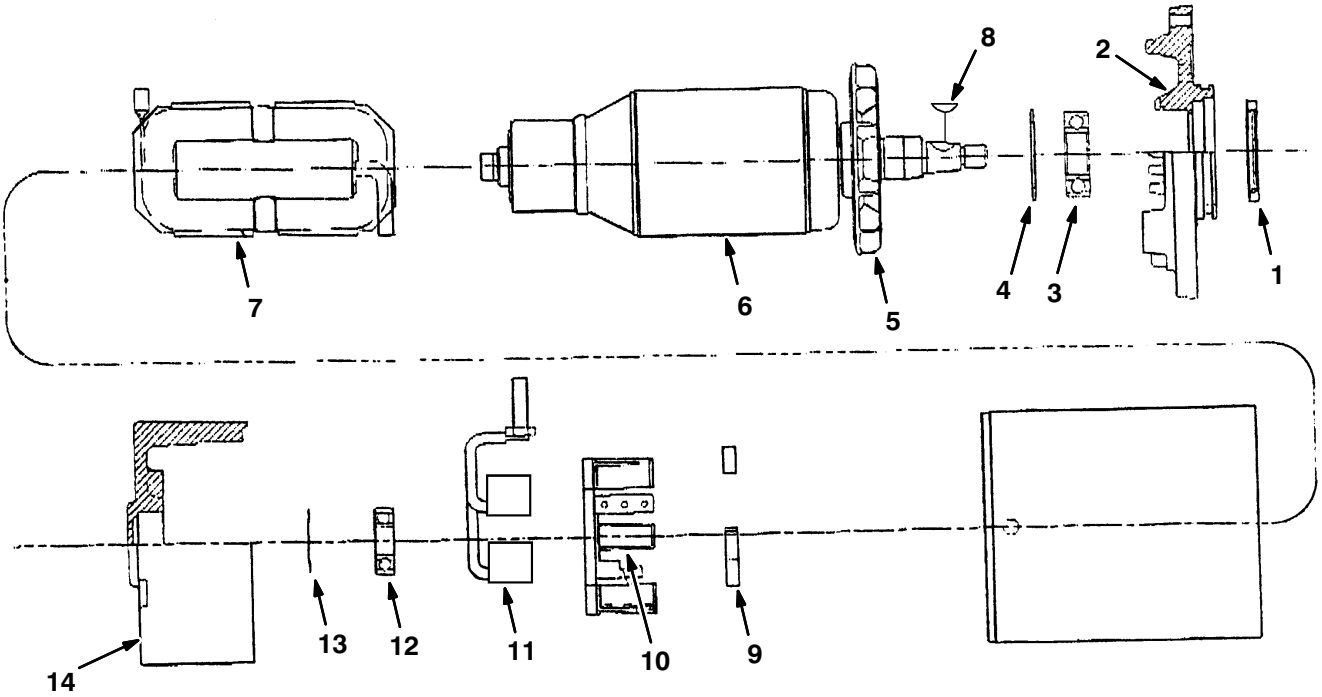

350403 − E

	Ref.	Part No.	Serial Number	Description	Qty.
▽		360065	(0000−)	Motor, Electric, 36VDC 2.1 HP	1
▲	1	361952	(0000−)	Seal	1
▲	2	361953	(0000−)	Drive Endhead	1
▲	3	48758	(0000−)	Bearing	1
▲	4	361954	(0000−)	Snap−Ring	1
▲	5	361955	(0000−)	Fan	1
▲	6	361956	(0000−)	Armature and Fan Assembly	1
▲	7	361957	(0000−)	Field Coil Kit	1
▲	8	00500−7	(0000−)	Key−Wdruff 0.16 0.662 Asa#0505	1
▲	9	361959	(0000−)	Brush Spring	4
▲	10	361960	(0000−)	Brush Box and Plate Assembly	1
▲	11	361961	(0000−)	Lead Assembly Kit	1
▲	12	361962	(0000−)	Bearing	1
▲	13	361963	(0000−)	Wavy Washer	1
▲	14	361964	(0000−)	Commutator Endhead	1

Fig. 5 − Electric Motor Breakdown, 360175

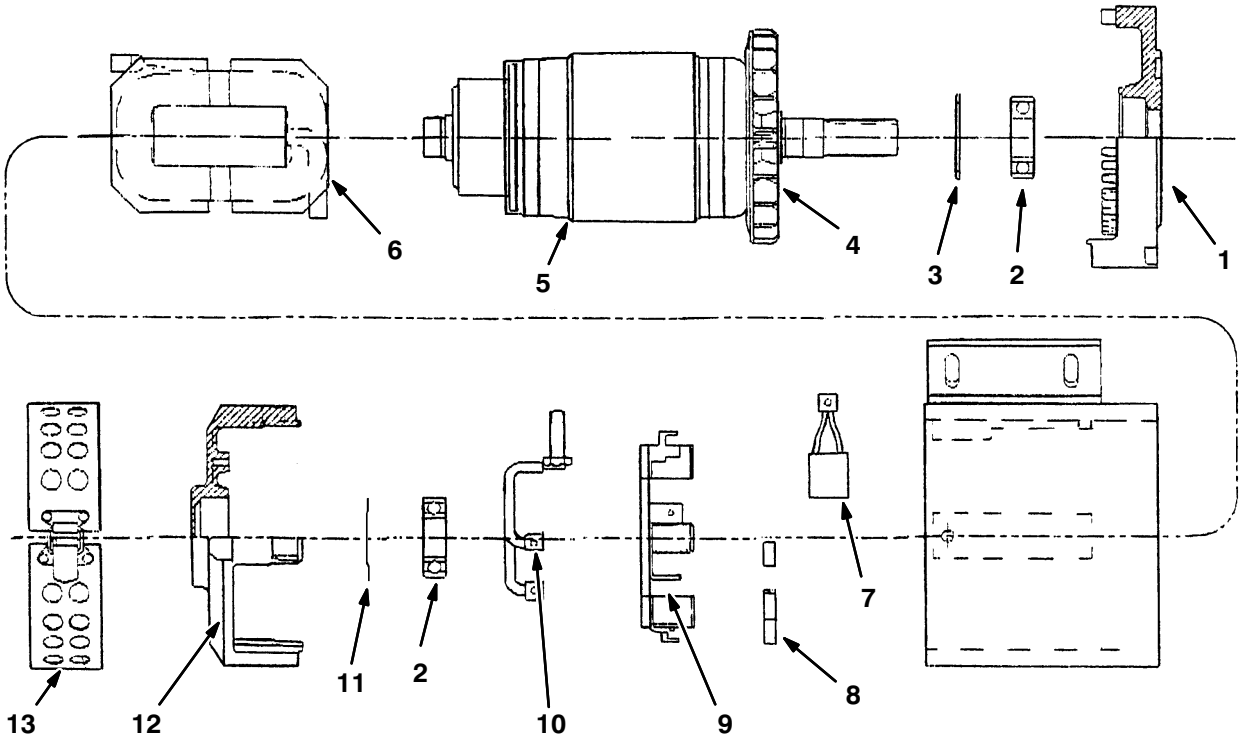

350405 − E

	Ref.	Part No.	Serial Number	Description	Qty.
▽		360175	(0000−)	Motor, Electric, 36VDC 4.0 HP	1
▲	1	361965	(0000−)	Drive Endhead	1
▲	2	48758	(0000−)	Bearing	1
▲	3	361954	(0000−)	Snap−Ring	1
▲	4	361966	(0000−)	Armature Fan	1
▲	5	361967	(0000−)	Armature and Fan Assembly	1
▲	6	361968	(0000−)	Field Coil Kit	1
▲	7	385742	(0000−)	Brush, Motor, Ele [Av#a91−112e]	4
▲	8	48755	(0000−)	Brush Spring	4
▲	9	361969	(0000−)	Brush Box and Plate Assembly	1
▲	10	361970	(0000−)	Lead Assembly Kit	1
▲	11	361971	(0000−)	Wavy Washer	1
▲	12	361972	(0000−)	Commutator Endhead	1
▲	13	361973	(0000−)	Headband	1

Fig. 6 − Hydraulic Solenoid Valve Breakdown, 1046688

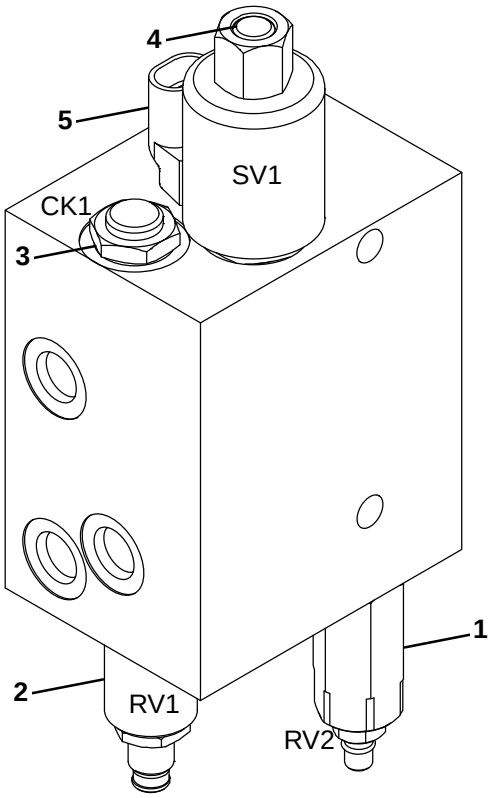

356086 − E

	Ref.	Part No.	Serial Number	Description	Qty.
▽		1046688	(0000−)	Valve, Hyd, Solenoid, 36vdc	1
▲▽	1	373740	(0000−)	Valve, Relief	1
▲▲		373745	(0000−)	Seal Kit, Valve, Hyd	1
▲▽	2	373738	(0000−)	Valve, Cntrl, Logic	1
▲▲		373582	(0000−)	Seal Kit, Hsng	1
▲▽	3	373741	(0000−)	Valve, Check	1
▲▲		373745	(0000−)	Seal Kit, Valve, Hyd	1
▲▽	4	373739	(0000−)	Valve, Stem, Hyd	1
▲▲		373584	(0000−)	Nut, Short	1
▲▲		373582	(0000−)	Seal Kit, Hsng	1
▲	5	373744	(0000−)	Solenoid, #10, 36vdc	1

Fig. 7 − Hydraulic Solenoid Valve Breakdown, 1045994

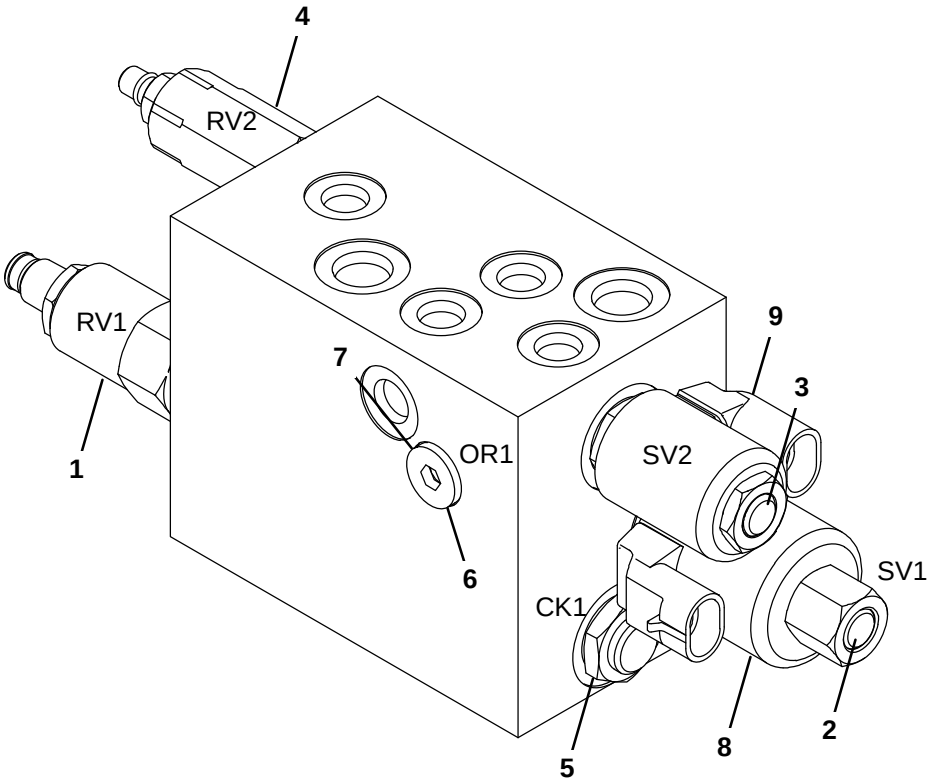

356088 − E

	Ref.	Part No.	Serial Number	Description	Qty.
▽		1045994	(0000−)	Valve, Hyd, Solenoid, 36vdc	1
▲▽	1	373738	(0000−)	Valve, Cntrl, Logic	1
▲▲		373582	(0000−)	Seal Kit, Hsng	1
▲▽	2	373739	(0000−)	Valve, Stem, Hyd	1
▲▲		373584	(0000−)	Nut, Short	1
▲▲		373582	(0000−)	Seal Kit, Hsng	1
▲▽	3	373734	(0000−)	Solenoid, Cntrl	1
▲▲		373584	(0000−)	Nut, Short	1
▲▲		1058233	(0000−)	Seal Kit, Cartridge	1
▲▽	4	373740	(0000−)	Valve, Relief	1
▲▲		373745	(0000−)	Seal Kit, Valve, Hyd	1
▲▽	5	373741	(0000−)	Valve, Check	1
▲▲		373745	(0000−)	Seal Kit, Valve, Hyd	1
▲▽	6	13904	(0000−)	Fitting, Plug, Org, #6, Valve [Cec]	1
▲▲		77005	(0000−)	Seal, Org, .078 X 00.47id 06	1
▲	7	373742	(0000−)	Plug, Orifice, Valve, Hyd, .035	1
▲	8	373743	(0000−)	Solenoid, #8, 36vdc	1
▲	9	373744	(0000−)	Solenoid, #10, 36vdc	1

SECTION 5

CONTENTS **PAGE**

PART NUMBER TO PAGE NUMBER CROSS REFERENCE LIST 5-2
PART DESCRIPTION TO PAGE NUMBER CROSS REFERENCE LIST 5-8

PART NUMBER TO PAGE NUMBER CROSS REFERENCE LIST

Part Number	Page Number
00500–10	2-45
00500–7	4-7
00915	2-37
00928	2-35
00954	2-45
01682	2-37
01685	2-41, 3-17
01689	2-5
01713	2-43
01714	2-33
01754	2-19
02076	2-29, 2-37
02356	2-37
02431	2-5
02469	2-61, 3-21
02850	2-55, 2-57, 3-9
03670	1-1, 2-37
04186	2-35
04375	2-53
04706	2-21
06415	2-49
06419	2-35
06474A	2-23
06549	2-13, 2-19, 2-25, 2-55, 3-11
06750	2-37
06927	2-55, 3-9
06933	2-13
06935	3-11
06941	3-15
06942	3-11
06943	2-23, 2-43, 2-45, 3-5, 3-7
06949	2-13, 2-25, 2-64
06955	2-11, 2-33, 3-15
06956	2-31
06957	2-39, 2-47
06958	2-29
06961	2-57, 2-65, 3-19
06963	2-23
06968	2-25
06969	2-5
06977	2-35
06988	2-41, 3-17
07259	2-27, 2-47
07514	2-43, 2-57
07785	2-41, 3-15, 3-17
07787	2-35
07791	2-5, 2-11, 2-13, 2-19, 2-23, 2-43, 2-47, 2-51, 2-55, 2-63, 2-67, 3-5, 3-7
07792	2-47, 2-67
07793	2-5, 3-5, 3-7
07887	3-27
08013N	2-3
08085	2-11, 2-33, 2-37, 2-41, 3-15, 3-17
08170	2-25
08175	2-27, 2-35, 2-45, 3-15
08179	2-43
08182	2-23, 2-25, 2-55
08298	2-47
08346	2-43
08361	2-47
08708	2-13, 2-15, 2-19, 2-21, 2-23, 2-25, 2-43, 2-45, 2-49, 2-51, 2-55, 2-64, 3-5, 3-7, 3-11, 3-15, 3-27
08709	2-5, 2-13, 2-25, 2-31, 2-35, 2-39, 2-47, 2-49, 2-53, 2-55, 2-57, 2-63, 2-67, 3-11, 3-15, 3-23, 3-25
08711	2-25, 2-35, 2-47
08713	2-29, 2-41, 3-17
08716	3-27
09010	2-41, 3-17
09026	2-55
09028	2-41, 2-47
09037	2-27
09087	2-43
09088	2-33
09200	2-13, 2-19, 2-49, 2-51
09244	2-55
09291	2-33
09740	2-5, 2-35, 3-23, 3-25
1008142	2-19
1012529	2-5
1014563	2-49, 2-55
1017250	2-13
1020341	2-7, 2-25, 2-47, 2-67
1023920	3-11
1024478	2-21
1025992	3-21
1026362	2-47
1027321	2-61
1027798	2-13
1027800	2-13
1031617	3-9
1035826	2-39, 2-41, 3-15, 3-17
10362	2-45
1036631	2-27
1036892	2-17, 2-21, 2-35, 2-43, 2-51, 2-55
1037346	2-5, 2-9, 2-11, 2-13, 2-15, 2-17, 2-19, 2-23, 2-51, 2-55, 2-57, 2-67, 3-9, 3-15, 3-23, 3-25
1037354	2-5, 2-19, 2-31, 2-33, 2-37, 2-43, 2-49, 2-55, 2-63, 3-5, 3-7
1037355	2-25, 2-47, 2-49, 2-57, 3-11, 3-23
1037358	2-37, 2-45, 2-49, 2-53, 2-67, 3-13, 3-17
1037427	2-41
1037485	2-41
1038176	2-55
1038957	2-19
1039250	2-57
1039735	2-25
1040467	2-19, 3-23, 3-25
1040694	2-47
1041468	3-30
1041716	3-28
1041873	2-19, 2-67
1041941	3-21
1042282	2-57
1042285	2-57
1042727	3-17
1042730	3-17
1042791	2-5
1042849	2-5
1042875	2-49
1043176	3-13
1043383	2-57
1043490	2-49
1043746	3-28
1043815	2-57
1043817	2-57
1043819	2-57
1043938	2-51
1044075	3-7
1044146	2-57
1044214	2-51
1044254	2-49
1044273	2-55
1044285	2-57
1044351	2-57
1044352	2-57
1044356	1-1, 2-57
1044357	1-1, 2-43
1044844	2-7
1044845	2-9
1044900	2-49
1044907	2-49
1045211	2-19
1045222	2-21
1045365	2-49
1045404	3-11
1045423	2-51
1045434	2-51
1045475	3-15
1045563	3-15
1045567	3-9
1045569	3-9
1045571	3-15
1045627	2-43
1045647	3-15
1045900	1-1, 2-57
1045994	3-19, 4-10
1046038	3-15
1046152	2-13
1046173	2-13
1046246	2-41
1046248	3-17
1046406	3-5, 3-7
1046498	3-15
1046553	2-25
1046590	2-43
1046688	2-65, 4-9
1046882	2-13
1047115	3-13
1047116	3-13
1047280	2-55
1047349	2-57
1047456	3-9

Part Number	Page Number
1047480	3-5, 3-7
1047575	1-1, 2-49
1047592	3-9
1047632	3-27
1047635	3-27
1047637	1-1
1047653	3-9
1047690	3-9
1047696	3-23, 3-25
1047704	3-5, 3-7
1047705	3-5, 3-7
1047706	3-9
1047717	2-77
1047728	3-11
1047773	3-23, 3-25
1047878	2-39
1048096	2-49
1048116	2-49
1048142	2-25
1048161	3-11
1048166	3-11
1048311	2-41, 3-17
1048335	2-57
1048351	2-21
1048353	2-57
1048408	3-13
1048456	2-19
1048488	2-49
1048504	2-77
1048508	2-23
1048529	2-77
1048556	3-15
1048565	2-43
1048718	3-25
1048720	3-23, 3-25
1048732	2-49
1048744	2-35
1048746	2-7, 2-9
1048750	2-7, 2-9
1048785	3-25
1048800	2-35
1048801	2-31
1048802	2-31
1048849	3-9
1048883	3-23
1048990	2-49
1049015	2-49
1049102	2-49
1049199	2-9
1049208	2-9
1049220	2-33
1049224	2-33
1049253	2-49
1049263	2-49
1049293	2-35
1049302	2-37
1049336	2-37
1049408	2-57
1049409	2-57
1049553	2-13
1049554	2-13
1049687	3-11
1049702	3-9
1049860	2-57
1049937	3-7
1049938	3-7
1049982	2-57
1049987	2-11
1049988	2-11
1049990	3-5, 3-7
1049991	3-5, 3-7
1049992	3-5, 3-7
1050046	3-3
1050070	3-18
1050106	2-57
1050158	2-67
1050162	3-9
1050170	2-78
1050242	2-55
1050243	2-55
1050255	3-9
1050266	3-9
1050727	2-78
1050955	2-23
1050957	2-23
1051045	2-55
1051049	2-55
1051115	2-55
1051135	2-19
1051199	2-57
1051250	2-5
1051510	2-21
1051766	2-55
1051773	2-55
1051866	2-63
1051892	2-63
1052113	2-25
1052114	2-25
1052203	2-47
1052231	2-47
1052263	2-25
1052446	2-55
1052452	2-49
1052454	2-49
1052474	2-13
1052475	3-3
1052531	2-23
1052533	3-21
1052534	3-21
1052540	2-23
1052541	2-23
1052560	2-27
1052561	2-27
1052562	2-29
1052563	2-29
1052620	3-27
1052625	2-69
1052644	2-45
1052646	2-45
1052647	2-45
1052649	2-45
1052650	2-45
1052651	2-45
1052652	2-43
1052653	2-43
1052763	2-45
1052803	2-15
1052804	2-15
1052805	2-15
1052808	3-11
1052817	2-15
1052864	2-67
1052885	2-55
1052919	2-57
1053068	3-11
1053233	3-5, 3-7
1053291	2-57
1053318	2-49
1053321	2-57
1053385	3-9
1053393	2-45
1053395	2-67
1053746	2-47
1053842	2-19
1054045	2-35
1054256	2-41, 3-17
1054368	3-9
1054369	3-23, 3-25
1054371	3-23, 3-25
1054374	3-25
1054391	3-23, 3-25
1054566	2-5
1054567	3-23, 3-25
1054588	2-37
1054619	2-5
1054625	3-23
1054872	2-19
1054875	2-25
1055049	2-31
1055074	2-31
1055376	2-61
1055583	2-55
1055605	2-5
1055606	3-9
1055674	2-35
1055757	3-5, 3-7
1056298	2-57
1056539	2-11
1056543	2-11
1056624	2-77
1057040	2-19
1057585	3-5
10576	2-11
1057602	1-1, 2-5
1057684	2-5
1057707	1-1
1057734	2-43
1057735	2-43
1057959	2-57
1057960	2-57
1057977	2-78
1058233	4-10
1058333	2-78
1058662	2-49
1058717	2-11
1058722	2-11
1058996	2-21
1059119	2-53
1059158	2-53
1059569	1-1, 2-35
1060253	3-29
1060278	2-53
1060331	2-43
1060334	2-43
1060444	2-43

Part Number	Page Number
1060541	2-11
1061216	2-5
1061575	2-57
1061582	2-77
10632–1	3-3
10632–15	2-67
10632–18	2-49
10632–4	2-55
1063238	2-25
1063246	2-29
1063248	2-29
1063616	2-9
1064184	2-19, 3-9
1064188	2-19
1064189	2-19
1064550	3-9
1064551	3-9
1064956	2-11
1065829	2-17
1066138	2-17
1066146	2-17
10664	2-63
1067059	2-47
1068098	2-17
1068101	2-11
1068102	2-11
1068103	2-11
1068104	2-11
1068105	2-11
1068803	2-41, 3-17
1068904	2-19
1071718	2-61
1071734	2-61
1071757	2-61
1071758	2-61
1071760	2-61
1071761	2-61
1071763	2-61
1071765	2-61
1071766	2-61
1071767	2-61
1071768	2-61
1071769	2-61
1071770	2-61
1071771	2-61
1071772	2-61
1071773	2-61
1071774	2-61, 3-21
1071776	2-61, 3-21
1071802	3-28
1071804	3-28
1071805	3-28
1071940	3-21
1071941	3-21
1071942	3-21
1071943	3-21
1071990	2-49
1072011	2-13
1072194	2-37
1072195	2-21
11211	2-55
11329	2-11
11398	2-35
11631	2-35
11843	2-45
12138	2-47
12263	2-23
12273	2-35
12317	2-49
12364	2-39
12459	2-47, 2-55, 3-23, 3-25
12540	2-29
13534	2-35
13766	2-35
13904	4-5, 4-10
140147	2-43
14368	2-23
14397	2-23
14595–1	2-25, 2-33
14605	2-25, 2-33, 2-41, 3-15, 3-17
15008	2-67
15331	2-41, 3-17
15675	2-15, 2-17, 2-55
15803	3-21
15846	2-69
16082	2-41, 3-17
16376	2-63
16455	2-47
16695	4-3
16735	2-51, 2-57
16931	2-11, 2-67
16949	2-15
17186	2-23
17284	2-11, 2-47
17404	2-47
19065	2-43
19066	2-13, 2-19, 2-25, 2-49, 2-57
19315	2-67
20170	2-43
20802	2-9
21168	2-47
21195	2-21
21955	4-3
21956	4-3
21958	4-3
21961	4-5
222290	2-13, 2-19, 3-15
222460	2-33, 2-39, 3-15
222516	2-11
22290	2-21
223198	2-11
223356	2-69
23498	2-45
23683	2-45
23788	2-47
24265	2-57
24899	2-35
25005	2-43
25014	2-23
25046	3-11
25887	2-35
27108	2-41, 3-17
27985	2-15
27988	2-35
27990	2-37
28835	4-3
29499	2-41, 3-17
29558	3-15
29584	2-39
30013	2-5, 2-9, 2-47, 2-49, 2-57, 3-11, 3-23, 3-25
30251	2-35
30252	2-35
30253	2-35
30255	2-35
30406	2-57
30533	2-11
312584	3-9
31354	4-3
31373	4-3
314012	3-9, 3-11
31597	2-61, 3-21
31603	2-61
31646	2-41, 3-17
32483	2-13, 2-23, 2-43, 2-67, 3-15
32485	2-23, 2-35, 2-37, 2-63, 3-11
32486	2-13, 2-15, 2-23, 2-25, 2-41, 2-55, 3-5, 3-7, 3-17
32490	2-11, 2-23, 2-43, 2-49, 2-55, 2-63, 2-67, 3-15, 3-23, 3-25, 3-27
32491	2-5, 2-11, 2-13, 2-15, 2-17, 2-25, 2-31, 2-33, 2-35, 2-39, 2-49, 2-51, 2-53, 2-55, 2-57, 2-64, 2-67, 3-5, 3-7, 3-15
32492	2-33, 2-37, 2-39, 2-41, 2-45, 2-47, 2-49, 2-55, 2-57, 2-65, 3-17, 3-19
32515	2-43
32523	2-15
32525	2-45
32598	2-47
32747	3-15
32899	2-25
32960	2-7
32980	2-5
32982	2-67
32983	2-11, 2-15
32984	2-29, 2-43, 2-67
32987	2-27, 2-35
33342	2-41, 3-17
33372	2-45
33807	2-19
34195	2-63
34359	3-19
34877	2-47
35529	2-47
35973	2-35
360023	2-25
360062	2-64
360063	2-64
360064	2-47
360065	2-29, 4-7
360074	2-25
360077	2-47, 3-15
360081	2-41, 3-17
360104	2-35
360108	2-35
360109	2-35

Part Number	Page Number
360110	2-35
360113	2-35
360115	2-35
360116	2-35
360134	1-1, 2-5
360136	1-1, 2-5
360137	2-5
360138	2-5
360175	2-37, 4-8
360179	2-37
360180	2-37
360270	2-25
360271	2-25
360272	2-25
360273	2-25
360274	2-25
360275	2-25
360276	2-25
360283	2-7, 2-9
360319	2-7
360320	1-1, 2-35
360327	2-49
360336	1-1, 2-55
360347	2-35
360357	2-41, 3-17
360386	2-47
360388	2-7, 2-9
360406	2-45
360410	2-39
360411	2-39
360413	2-33
360414	2-39, 3-15
360417	2-39
360424	2-55
360449	2-39
360451	2-39
360454	2-33
360455	2-47
360460	2-31, 2-33
360467	2-64
360488	2-33
360491	2-33, 2-35
360492	2-35
360516	2-67
360602	2-49
360603	1-1, 2-55
360606	2-55
360627	1-1
360680	2-29
360686	1-1, 2-37
360704	2-11
360711	2-21
360753	2-45
360761	1-1, 2-9
360765	2-45
360768	2-47
360774	2-31
360781	2-5, 2-9
360784	1-1, 2-7
360801	2-39, 2-41, 3-15, 3-17
360802	2-25
360821	2-33
360824	2-51
360844	1-1
360848	2-55
360867	2-21
360893	2-49
360894	2-49
360906	2-23
360917	2-45
360935	2-25
360943	2-57
360961	2-39
360973	2-11, 3-27
360980	2-29
360981	2-43
360989	2-69
360991	2-63
361012	2-64, 4-5
361023	1-1, 2-63
361026	2-41, 3-17, 4-3
361028	2-64, 4-5
361031	2-61
361032	2-61
361038	2-61
361040	2-61
361045	2-61
361053	2-61
361074	2-19
361096	2-33
361097	2-33
361114	2-33
361165	2-15
361191	2-37
361198	2-63
361271	2-63
361295	2-47
361299	2-64
361306	2-7
361327	2-45
361339	2-49, 3-5, 3-7, 3-9
361342	2-11
361343	2-11
361344	2-11
361345	2-11
361346	3-9
361554	2-11
361555	2-35
36192	2-11
361936	2-45
361937	2-45
361951	2-11
361952	4-7
361953	4-7
361954	4-7, 4-8
361955	4-7
361956	4-7
361957	4-7
361959	4-7
361960	4-7
361961	4-7
361962	4-7
361963	4-7
361964	4-7
361965	4-8
361966	4-8
361967	4-8
361968	4-8
361969	4-8
361970	4-8
361971	4-8
361972	4-8
361973	4-8
361993	2-45
361994	2-45
361995	2-45
36328	2-47
363502	2-7
36643	2-35
36801	2-23
369702	2-5
369781	2-39, 3-15
370010	2-3
370025	2-3
373582	4-9, 4-10
373584	4-9, 4-10
373730	2-37
373734	4-10
373738	4-9, 4-10
373739	4-9, 4-10
373740	4-9, 4-10
373741	4-9, 4-10
373742	4-10
373743	4-10
373744	4-9, 4-10
373745	4-9, 4-10
375019	2-43
375020	2-31
37555	4-3
377433	2-19
379000	3-5, 3-7
379719	2-55
382516	2-19
383165	2-19
384418	2-57
384419	2-57
385742	4-8
386346	2-19
386810	2-13, 2-43
387282	2-61
387376	2-45
387387	2-45
39005	2-33
391803	2-11
39239	2-19
39277	2-5, 2-67
39278	2-29
39283	2-37
39308	2-23
39322	2-57
39332	2-45
39346	2-39
39349	2-7, 2-9
39350	2-27, 2-35
39396	2-41, 3-17
39527	2-27, 2-35
395973	2-65
395974	2-65
39658	2-19
397249	3-15
39807	2-13
398526	2-19
40607	2-55, 2-57
41140	2-57
41141	2-5, 2-67

Part Number	Page Number
41169	2-9
41178	2-55, 3-11
41186	3-11
41187	2-37
41305	2-41, 3-17
41346	2-29, 3-5, 3-7
41359	2-23, 2-39
41430	2-23, 2-35, 2-37, 2-39, 2-47, 2-49
41561	2-45
42120–1	2-47
42120–4	2-27
42215	2-21
42227	2-63
43454	2-15
43611	2-23
43958	2-27
44078	2-43
44906	2-23, 2-31, 2-39
44961	2-5
45628	4-3
46029	2-49
46481	2-63
46559	2-41, 3-17
47501	2-41, 3-17
47504	2-21
47522	2-27, 2-65
47585	2-21
47638	2-47
47655	2-63
47753	2-41, 3-17
47985	3-29, 3-30
48732	2-47
48755	4-8
48758	4-7, 4-8
49034	3-5, 3-7
49145	2-25
49177	2-11
49263	2-19, 2-21, 2-27
49266	2-41, 2-49, 2-67, 3-17
49681	2-23
49697	2-57
49826	2-9, 2-49
49924	2-37
50902	2-37, 2-45
51109	2-25
51225–1	2-55
51529	2-31
51562	3-15
51564	2-35
51813	2-39
52402	2-37, 2-64
52508	2-35
54009	3-27
54390	2-25
54400	2-39, 3-15
54995	2-31, 2-39
55034	3-3, 3-9
55586	2-65
55685	2-64
55779	2-35
55808	2-29
55965	3-27
56185	2-21
56690	2-21
56692	2-63
56820	2-27, 2-47, 2-65
56821	2-41, 2-63, 3-17
56835	2-21
57496	2-37
57972	2-61
57974	2-61
58056	2-27
58366	2-19, 3-3
58596	4-6
59431	2-3
59542	2-47
59633	2-41, 3-17
59661	3-11
59870	2-64
59965	2-55
61791	2-29
63416	2-64
64173	2-39
64379	2-55
64425	2-41, 3-17
64886	2-27
65221	1-1, 2-63
65230	4-3
67004	3-27
67366	2-47
67683	2-64
67767	2-5, 2-55, 2-57
69924	2-27
69925	2-27
69926	2-27
69928	2-27
69971	2-11
70006	2-63
70622	2-21
70709	2-21
70717	2-21
71026	2-17
71126	2-39, 3-15
71244	2-45
71367	2-25
71477	2-11
71529	2-69
71556	2-61
71557	2-61
71574	4-6
71579	2-5
72040	2-29
72084	2-23
72164	2-13
72171	2-13
72439	2-15
72968	2-5
74094	4-3
74100	4-3
74109	4-6
74110	4-6
74111	4-6
74112	4-6
74140	4-6
74173	2-21, 4-6
74181	4-6
74182	4-6
74190	4-6
74191	4-6
74195	4-6
74218	4-6
74250	4-3
74251	4-6
74454	2-45
74455	2-37, 2-45, 2-47, 2-55, 2-57, 2-67, 3-11
75128	2-11
75428	3-9
75430	2-23
75939	2-43
75968	2-21
76062	2-67
762425	2-47
762426	2-64
762427	2-55, 3-15
762428	2-65
762432	2-27, 2-47, 2-65
762433	2-21
762434	2-63
762435	2-21, 2-65
762436	2-64
762438	2-37, 2-64
762442	2-27, 2-65
762443	3-21
762448	2-63
762456	2-63
762458	3-17
762459	2-21
762492	2-63
763045	3-5, 3-7, 3-9, 3-11
763149	2-57
76316	2-63, 2-65
76570	2-39, 3-15
767411	2-63, 3-17
76762	2-61
76960	2-15
77005	4-10
77097	2-55, 3-15
79246	2-55
79785	4-5
79786	4-5
79787	4-5
79788	4-5
79789	4-5
79792	4-5
79794	4-5
79795	4-5
79796	4-5
79800	4-5
79801	4-5
79802	4-5
79804	4-5
79805	4-5
79806	4-5
79807	4-5
79808	4-5
79812	4-5
79814	4-5
79820	4-5
79874	3-19
82819	2-61
82833	2-21, 2-27
84581	2-41, 3-17
86029	2-41, 3-17

Part Number	Page Number
86375	2-67
86377	2-13
86379	2-67
86398	2-69
86417	2-67
86444	2-9
86618	2-57
86659	2-25
86798	2-23
86866	2-5
87097	2-3
87099	2-3
87104	2-55
87172	3-13
87180	2-5
87181	1-1, 2-5
87216	2-47
87244	2-47
87277	2-5
87299	2-45
87308	2-15, 2-25
87318	2-67
87334	2-3
87349	2-19
87355	2-29
87482	2-67
87483	2-67
87495	2-69
87496	2-69
87507	2-67
87536	2-19
87558	2-69
87581	2-15
87631	2-35
87689	1-1, 2-55
87707	2-43
87725	2-23
87749	2-29
87750	2-29
87838	2-45
87839	2-29
87840	2-29
87841	2-29
87849	2-29
87866	2-19
87983	2-43
9000846	2-13
9000879	2-13
9006013	3-23
9006014	3-25
9006015	3-5
9006021	3-13
9006023	3-27
9006388	1-1
9006392	1-1
9006534	1-1
9006724	3-31
9006727	3-31
9006901	2-47
9006910	3-27
9006978	2-67
9006979	2-19
9006982	2-37
9006987	2-67
9007131	2-13

Part Number	Page Number
9007177	2-67
9007181	3-29
9007206	3-31
9007207	3-31
9007208	3-31
9007209	3-31
9007210	3-31
9007211	3-31
9007212	3-31
9007213	3-31
9007214	3-31
9007215	3-31
9007216	3-31
9007217	3-31
9007218	3-31
9007219	3-31
9007220	3-31
9007221	3-31
9007222	3-31
9007223	3-31
9007224	3-31
9007225	3-31
9007226	3-31
9007227	3-31
9007228	3-31
9007229	3-31
9007230	3-31
9007373	2-47
9007391	2-43
9009383	3-31
9011418	2-47
994263	3-30

PART DESCRIPTION TO PAGE NUMBER CROSS REFERENCE LIST

A

Adapter Wldt, Wand, Vacuum, 3-27
Alarm Assy, Backup, 12–48vdc 82–102dba, 2-13
Alarm Assy, Backup, 12/48vdc, 2-13
Alarm, Audio, 10–48vdc [Mallory], 2-19
Angle Wldt, Bmpr, Tower, Lh, 3-13
Angle Wldt, Bmpr, Tower, Rh, 3-13
Angle Wldt, Mtg, Door, 3-11
Angle, Bottom, 3-15
Angle, Cab, Rear [Drip Ledge, S20], 3-9
Angle, Cab, Side [Drip Ledge, S20], 3-9
Angle, Keeper, Cable, 2-33
Angle, Mtg, Alarm, 2-13
Angle, Mtg, Latch, 3-11
Angle, Mtg, Muffler, Vacfan, 2-45
Angle, Mtg, Wndw, Lh, 3-9
Angle, Mtg, Wndw, Rh, 3-9
Arm Wldt, Brush, Main, Drive, Lh, 2-35
Arm Wldt, Brush, Main, Idler, 2-35
Arm Wldt, Cntrl, Dir, 2-23
Arm Wldt, Lift, Brush, 2-39
Arm Wldt, Lift, Lh, 3-17
Arm Wldt, Lift, Rh, 2-41
Arm, Idler, 2-35
Arm, Lever, Brake, 4.1 [Knott], 2-25
Arm, Lift, Hppr, W/ Label, Ce [S20], 2-47
Arm, Safety, Hppr, W/ Label Ce [S20], 2-47
Arm, Steering, 2-27
Armature and Fan Assembly, 4-7, 4-8
Armature Fan, 4-8
Armrest Assy, Rh, F/53845 [Grammer], 2-11

B

Ball, 4-5
Balljoint, M6 X 1.0 Fem, M6 X 1.0 Mal, 2-23
Bar, Cover, 2-57
Bar, Hex, Stl 0.75, 01.6l .50h Thru, 2-35
Battery 340 AH MF S20, 3-29
Battery Kit MF 36V/340Ah [S20], 3-29
Battery Kit Traction Tubular 36V/425Ah, 3-30
Battery, 36Vdc 425 Ah [Set of 2, 5 Pzb425], 3-30
Bearing, 4-7, 4-8
Bearing, Ball, 0.67b 1.57d 0.47w, 2-45
Bearing, Ball, 0.98b 2.05d 0.59w, 2-35
Bearing, Ball, 1.18b 2.44d 0.63w, 2-25
Bearing, Ball, 1.38b 2.83d 0.67w, 2-35
Bearing, Flng, 2hole, 0.50b, 2-21
Bearing, Flng, 2hole, 0.50b [Nyl], 2-21
Bearing, Flng, 2hole, 1.00b, 2-47
Bearing, Needle, 4-6
Bearing, Self Align, 1.00b 1.63d, 2-27
Bearing, Self Align, 1.25b 2.00d, 2-47
Bearing, W/ Collar, 0.75b 1.85d 1.06w, 2-35
Bellcrank, Lift, Brush, Side, Lh, 2-39
Bellcrank, Lift, Brush, Side, Rh, 2-39
Bellows, Solenoid, .75–16, 1.5l, 2-43
Belt, V, 31.5l [3v], 1-1, 2-35
Belt, V, 32.2l [07m], 2-45
Belt, V, 33.5l [3v], 1-1, 2-37
Belt, V, 54.0l [3vl], 1-1, 2-37
Block, Adj, 2-31
Block, Adj, Pivot, 2-39, 3-15
Bolt, Eye, .38–16 X 3.22, 0.28 Eye, 2-45
Bolt, Gearbox, Drive Wheel, 2-29
Boot, .63id .29l .90w, 2-19
Boot, 90deg .50id .57id X .84id 1.0l,Blk, 2-29, 2-37
Boot, Bellows, 3.1l 4.4w 2.8h 1hole, Neo, 2-21
Boot, Circuitbreaker, 2-13
Boot, Switch, Ignition, 2-19
Bracket Wldt, Fltr, 2-57
Bracket Wldt, Latch, 2-15
Bracket Wldt, Mtg, Bmpr, 3-13
Bracket Wldt, Mtg, Door, 3-11
Bracket Wldt, Mtg, Fan, 2-45
Bracket Wldt, Mtg, Motor, 2-37
Bracket Wldt, Steering, Tilt, 2-21
Bracket Wldt, Stop, Brush, 2-9
Bracket Wldt, Switch, Shakr, 2-43
Bracket, Adj, Strike, 2-17
Bracket, Angle, Hppr Bottom Stiffener, 2-49
Bracket, Angle, Keeper, Cable, 2-39, 3-15
Bracket, Angle, Mtg, Brg, 2-35
Bracket, Angle, Mtg, Pin, Latch, 2-15
Bracket, Angle, Pivot, Door, Dump, Lh, 2-55
Bracket, Angle, Pivot, Door, Dump, Rh, 2-55
Bracket, Arm, Side Brush, 2-41
Bracket, Door, Indicator, 2-55
Bracket, Hinge, Door, 2-7, 2-9
Bracket, Inlet, Vacfan, 2-43
Bracket, Latch, Door, 3-11
Bracket, Latch, Keeper [Southco], 2-57
Bracket, Latch, Mtg, Strike, 2-17
Bracket, Lift, Brush, Auto, 2-33
Bracket, Mtg, Angle, Air Fltr, 1-1
Bracket, Mtg, Bmpr, Front, Lh, 2-49
Bracket, Mtg, Bmpr, Front, Rh, 2-49
Bracket, Mtg, Circuitbreaker, Ele, 2-19
Bracket, Mtg, Cyl, 2-55
Bracket, Mtg, Fan, Ev, 3-9
Bracket, Mtg, Fltr, Hyd, 2-63
Bracket, Mtg, Hinge, 2-49
Bracket, Mtg, Horn, 3-3
Bracket, Mtg, Mirror, 3-5, 3-7
Bracket, Mtg, Mirror, Brush, 3-5, 3-7
Bracket, Mtg, Mirror, Top, 3-5, 3-7
Bracket, Mtg, Motor, Lh, 3-17
Bracket, Mtg, Motor, Rh, 2-41
Bracket, Mtg, Panel, Cab, 3-9
Bracket, Mtg, Pedal, Lh, 2-23
Bracket, Mtg, Pedal, Rh, 2-23
Bracket, Panl, Contrl, W/Label, Eu, 2-67
Bracket, Rod, Safety, 2-51
Bracket, Sbdc, Lh, 3-25
Bracket, Sbdc, Rh, 3-23, 3-25
Bracket, Sidebrush, Lh, 3-17
Bracket, Sppt, Ele Panl, 2-67
Bracket, Stop, Brush Door, 2-7, 2-9
Bracket, Switch, Brake, 2-25
Bracket, Switch, Shaker, 2-43
Bracket, Tray, 2-57
Brake Assy, 2-25
Brush Box and Plate Assembly, 4-7, 4-8
Brush Kit, Side, Dual, Ele,Ci[S20 Affil], 3-25
Brush Spring, 4-7, 4-8
Brush–Side Swp, Polypropylene, 2-3
Brush–Side Swp, Soft Nylon, 2-3
Brush–Sweep, Polyester 8 DR, 2-3
Brush–Sweep, Polypropylene, 2-3
Brush–Sweep, Polypropylene and Wire, 2-3
Brush–Sweep, Wedge, Polypropylene, 2-3
Brush–Sweep, Window, Polypropylene, 2-3
Brush, Motor, Ele [Av#a91–112e], 4-8
Bumper Kit, Corner, Rear, Ci [S20], 3-13
Bumper Wldt, Front, 2-49
Bumper, Rbr, 0.90d 0.38th 0.18h, 2-11
Bumper, Rbr, 1.0d 0.38th .25–20, 2-9
Busbar, .06 0.6w 2.5l 2/.28h, 2-67
Busbar, Fuse, .6 0.6w 0.8h 2.0l, 2-67
Bushing, 4-5
Bushing, Flng, 0.50b 0.59d 0.38l, 2-45
Bushing, Sleeve, 0.50b 0.59d 0.38l, Stl, 2-39
Bushing, Sleeve, 0.63b 0.72d 0.25l, 2-33, 2-35
Bushing, Sleeve, 0.75b 0.88d 0.75l, Tef, 2-55
Bushing, Sleeve, 0.78b 0.86d 0.93l, Bnz, 2-25
Bushing, Sleeve, 1.00b 1.13d 0.99l, Fgl, 2-47
Button, Cntrl, Horn, 2-21

C

Cable, 04ga 12.0l Blk .34ring /.34ring, 2-69
Cable, 04ga 15.0l Blk .28ring /.34ring, 2-69
Cable, 04ga 21.0l Blk .28ring /.34ring, 2-69
Cable, 04ga 30.0l Blk .34ring /.34ring, 2-69
Cable, 04ga 32.0l Blk .34ring /.34ring, 2-69
Cable, 04ga 48.0l Blk .28ring /.34ring, 2-69
Cable, 04ga 60.0l Blk .34ring /.34ring, 2-69
Cable, 06ga 11.0l Blk .28ring /.34ring, 2-69
Cable, Charger Eu, Bc5 & Bc7, 3-28
Cable, Glv .13d 010.0l .52eye /.52eye, 3-13
Cable, Glv .13d 010.3l .4clevis /.25–28, 2-33
Cable, Glv .13d 021.0l 330eye /330eye, 2-11
Cable, Glv .13d 031.0l .4clevis /.55eye, 2-33
Cable, Ss .12d 60.25l .55eye / M6–1.0, 2-39
Cable, Ss .12d 89.0l .55eye / M6–1.0, 3-15
Cable, Ss .19d 008.5l .55eye / M6–1.0, 2-41, 3-17
Cam, Plt, Brake [Nickel], 2-25
Cap Assembly, 4-5
Cap Screw, 4-3
Cap, Breather, Hyd, 1-1
Cap, Breather, Hyd, 5.2 Ds, 2-63
Cap, End, 4-3, 4-6

Cap, Hub, Dust, 2.57d 0.77l, 2-25
Cap, Screw, 4-6
Cap, Vinyl, 0.23id, 1.50l, 2-35
Cap, Vinyl, 3.28d 0.45l, 2-35
Channel Wldt, Ohg, Lh, 3-5, 3-7
Channel Wldt, Ohg, Rh, 3-5, 3-7
Channel, .19, 2.8w 2.0 04.0l, 2/ M10, 2-45
Channel, Latch, 2-15
Channel, Mtg, Lock, 2-47
Channel, Mtg, Steering Latch, 2-21
Channel, Recirculation Flap, 2-5
Charger, 36vdc 045a Gel Sb175g 230vac, 3-28
Charger, 36vdc 060a Wet Sb175g 230vac, 3-28
Charger, 36vdc 060a Wet Sb175g 230vac Uk, 3-28
Circuitbreaker, 05.0a, Resetable, 2-13
Circuitbreaker, 15a, Resetable, 2-19
Circuitbreaker, 2.5a, Resetable, 2-13, 2-19, 3-9
Circuitbreaker, 20a, Resetable, 2-19
Clamp, Cable, Stl, 0.69d X 0.62w, 1hole, 2-5, 2-55, 2-57
Clamp, Cable, Stl, 1.0x2.0x0.62w, 1hole, 2-47
Clamp, Cable, Stl, 1.25d X 1.00w, 1hole, 2-19, 3-3
Clamp, Hose, Wormdrive, 3.56–4.50d, .50w, 2-45
Clamp, Steering, 2-29
Clevis, Adj, 0.25pin, 0.25–28 Rh, Pl, 2-25, 2-33
Clevis, Adj, M6 Pin, M6 X 1.0 Rh, Pl, 2-39, 2-41, 3-15, 3-17
Clip, Grip, Finger, 1.00–1.88d,White Vyl, 3-27
Clip, Grip, Pipe, 0.50, Plstc, 3-9
Clip, Keeper, 2-57
Clip, Spring, Prop Arm, 2-47
Column, Steering, 09.9l 0.86d 36tooth, 2-21
Commutator Endhead, 4-7, 4-8
Cone, 4-5
Connector, Anderson, 175A, Orange, 3-29, 3-30
Contactor, 36vdc [Spco], 2-13
Contactor, 36vdc [Spno], 2-67
Contactor, 36Vdc, 100A, Sp, No, 2-13, 2-43
Controller, 36vdc [Only F/ Tnv], 2-67
Cord, Sponge, Neo, 1.0d 36.3l, 1-1, 2-55
Cover, Hppr, 2-51
Cover, Mold, 2-57
Cover, Plt, Floor, 2-23
Cover, Wldt, Component, Ele, W/Label [S20] Ce, 2-67
Cs, Seal, Lip [76038ddur], 3-9
Cyl, Hyd, 2.5b 9.0l 01.50strk, 2500, 3-15
Cylinder, Hyd, 2.0b 08.0l 04.00strk 2500, 2-55
Cylinder, Hyd, 2.0b 19.0l 12.00strk 1500, 2-27
Cylinder, Hyd, 2.5b 24.8l 13.50strk 2500, 2-47
Cylinder, Hyd, 2.5b 24.8l 13.50strk 3000, 2-47

D

Damper, Inlet, 2-43
Deflector, Hppr, Lh, 2-49
Deflector, Hppr, Rh, 2-49
Detent Adaptr, 4-5
Diode, Ele, Plug, 2-13, 2-19, 3-15
Disc, 0.06, 04.39d 01.67b, 4/.30h 3.8bc, 2-35
Disc, 0.08, 04.39d 02.56b, 4/.28h 3.8bc, 2-35
Door Wldt, Brush, Lh, 2-9
Door Wldt, Brush, Rh, 2-7
Door Wldt, Cab, 3-11
Door Wldt, Dump, Hppr, 2-55
Door Wldt, Wand, Vacuum, 3-27
Door, Access, Hppr, 2-49
Drive, 4-3, 4-6
Drive Endhead, 4-7, 4-8
Duct, Vyl, 0.74 X 1.50 .75D Max 48.0L, 3-3, 3-9

E

Elbow, Mold, 2-57
Element, Fltr, Oil, Spin–On, 1-1, 2-63

F

Fan, 4-7
Fan, Defroster, 36vdc, 07.9d, 3-9
Fastener, Wire, Tie [Button Head], 2-19, 2-67
Field Coil Kit, 4-7, 4-8
Filter Assy, Hyd, 10mic 035gpm, Spin–On, 2-63
Filter, Cyl, 11.09d, 13.31l, 6.724 Id, 1-1, 2-57
Fitting, Brs, Str, Bm03/Pm02, 2-55, 2-57
Fitting, Grease, 2-29
Fitting, Grease, Str Pm04 .47l, 2-27, 2-47
Fitting, Hyd, E45, Fm04/Om04, 3-19
Fitting, Hyd, E45, Fm06/Om06, 2-27, 2-65
Fitting, Hyd, E45, Jm04/Om04, 3-19
Fitting, Hyd, E45, Jm06/Om06, 2-27, 2-65
Fitting, Hyd, E90, Ff06/Fm06, 2-21
Fitting, Hyd, E90, Fm04/Om04, 2-55, 3-15
Fitting, Hyd, E90, Fm04/Om06, 2-47
Fitting, Hyd, E90, Fm06/Om06, 2-27, 2-47, 2-65
Fitting, Hyd, E90, Fm08/Om10, 2-63, 3-17
Fitting, Hyd, E90, Fm12/Om12, 2-63
Fitting, Hyd, E90, Jf06/Jm06, 2-21
Fitting, Hyd, E90, Jm04/Om04, 2-55, 3-15
Fitting, Hyd, E90, Jm04/Om06, 2-47
Fitting, Hyd, E90, Jm06/Om06, 2-27, 2-47, 2-65
Fitting, Hyd, E90, Jm08/Om10, 2-41, 2-63, 3-17
Fitting, Hyd, E90, Jm08/Om12, 2-63
Fitting, Hyd, E90, Jm12/Om12, 2-63
Fitting, Hyd, E90, Om04/Qm04, 2-65
Fitting, Hyd, Plug, Fm08, 2-63
Fitting, Hyd, Plug, Jm08, 2-63
Fitting, Hyd, Rst, Fm04/Of04, .047, 2-47
Fitting, Hyd, Rst, Jf04/Jm04, .047, 2-47
Fitting, Hyd, Str, Ff08/Fm06, 3-17
Fitting, Hyd, Str, Fm04/Om04, 2-65
Fitting, Hyd, Str, Fm04/Om06, 2-64
Fitting, Hyd, Str, Fm06/Fm06 Bh, 3-21
Fitting, Hyd, Str, Fm06/Om06, 2-21
Fitting, Hyd, Str, Fm06/Om08, 2-37
Fitting, Hyd, Str, Fm08/Om06, 2-21
Fitting, Hyd, Str, Fm08/Om10, 2-63
Fitting, Hyd, Str, Fm12/Om10, 2-37
Fitting, Hyd, Str, Fm6/Om08, 2-64
Fitting, Hyd, Str, Jf08/Jm06, 2-41, 3-17
Fitting, Hyd, Str, Jm04/Om04, 2-65
Fitting, Hyd, Str, Jm04/Om06, 2-64
Fitting, Hyd, Str, Jm06/Jm06, 3-21
Fitting, Hyd, Str, Jm06/Om06, 2-21
Fitting, Hyd, Str, Jm06/Om08, 2-37, 2-64
Fitting, Hyd, Str, Jm08/Om06, 2-21
Fitting, Hyd, Str, Jm08/Om10, 2-63
Fitting, Hyd, Str, Jm08/Om12, 2-63
Fitting, Hyd, Str, Jm12/Om10, 2-37
Fitting, Hyd, Str, Om04/Qm04, 2-65
Fitting, Hyd, Tee, Ff06/Fm06/Fm06, Run, 2-21, 2-65
Fitting, Hyd, Tee, Fm06/Fm06/Om06, Br, 2-64
Fitting, Hyd, Tee, Fm06/Fm06/Om06, Run, 2-63
Fitting, Hyd, Tee, Jf06/Jm06/Jm06, Run, 2-21
Fitting, Hyd, Tee, Jm06/Jm06/Om06, Br, 2-64
Fitting, Hyd, Tee, Jm06/Jm06/Om06, Run, 2-63, 2-65
Fitting, Plug, Org, #6, Valve [Cec], 4-10
Flange Mounting, 4-3
Flange, Brg, 1.9id 2h, 2-35
Flap, Recirculation, 1-1, 2-5
Flasher, 12/48vdc 5a [6309/12–48v], 2-13
Frame Wldt, Ele [S20], 2-5
Fuse, 080a, 0.88 2.4l, 125volt,Slow–Blow, 2-67
Fuse, 100a, 0.88 2.4l, 125volt, 2-67

G

Gasket, Cap, Breather, Hyd, 2-63
Gasket, Cover, 1-1, 2-57, 2-67
Gasket, Door, Wand, Vacuum, 3-27
Gasket, Tray, 2-57
Gauge, Discharge, Battery, 36vdc, Led, 2-19
Gauge, Hourmeter, 05–277vdc/Vac, 2–Hole, 2-19
Gauge, Hourmeter, 12–60vdc, Analog [10k], 2-19
Gear, Drive, 2-29
Gearbox, 90, Drive Wheel, Rear [Hu], 2-29
Gerotor Set, 4-3, 4-6
Grip, Vyl, 2-43, 2-64
Grommet, Rbr, 0.50id, F/0.8h, .09 Matl, 2-67
Grommet, Rbr, 0.62id, F/0.9h, .06 Matl, 2-55
Grommet, Rbr, 0.69id, F/1.0h, .25 Matl, 2-49
Grommet, Rbr, 1.06id, F/1.4h, .19 Matl, 3-3
Grommet, Taillight, 5.44 X 3.56, 2-5

Guard, Belt, Brush Drive, W/ Label, Ce, 2-37
Guard, Brush, 2-41, 3-17
Guard, String, Motor, Brush, 2-41, 3-17

H

Handle Wldt, Brush, Side, 2-39
Handle Wldt, Door, 3-5, 3-7
Handle Wldt, Latch, Shrd, 2-15
Handle Wldt, Lift, Brush, 2-31
Handle, Cntrl, Valve, 2-64
Handle, Door, 3-11
Harness, Alarm / Strobe, 36vdc [S20], 2-13
Harness, Alarm / Strobe, Ohg, 36Vdc [S20], 3-3
Harness, Brush, Side, Lh, 36Vdc [S20], 3-18
Harness, Fan, Ic [S20], 3-9
Harness, Hppr, 36vdc [S20], 2-77
Harness, Hppr, Cover [S20], 2-77
Harness, Main, Ele [S20], 2-77
Harness, Seat [S20], 2-11
Harness, Shakr, Motor [S20], 2-77
Harness, Wire, Controller, 2-69
Headband, 4-8
Headlight , 36v, 2-49
Headlight, 12–48vdc, 10watt, Rnd Led, Ul, 2-49
Headlight, 36vdc, Led, UL, 2-49
Hinge, .25pin .12 3.0w 03.0l, 4/0.28sl, 2-49
Hinge, .25pin .12 3.0w 04.5l, 6/0.38sl, 2-11
Hinge, .38pin .12 3.5w 07.8l, 4/0.38h, 2-7, 2-9
Hinge, .38pin .12 3.5w 4.0l [Oal], 2-51
Hopper [S20], 2-49
Horn, 36vdc, 115 Dba, 2-5
Hose Assy, W/2cuff, 2.0d 120l 2.0/2.0, 3-27
Hose, Flex, Vacuum, 04.0d, 017.0l, 2-45
Hose, Flex, Vacuum, 04.0d, 21.0l, 1-1
Hose, Hyd, Low06, Jf06e45/Jf06str, 022.0, 2-61
Hose, Hyd, Low06, Jf06e90/Jf06str, 052.0, 2-61
Hose, Hyd, Low06, Jf06str/Jf06str, 026.0, 2-61
Hose, Hyd, Low06, Of06e45/Of06str, 022.0, 2-61
Hose, Hyd, Low06, Of06e90/Of06str, 052.0, 2-61
Hose, Hyd, Low06, Of06str/Of06str, 026.0, 2-61
Hose, Hyd, Low08, Jf08e45/Jf08str, 024.0, 2-61
Hose, Hyd, Low08, Jf08e90/Jf08str, 024.0, 2-61
Hose, Hyd, Low08, Jf08e90/Jf08str, 032.0, 2-61
Hose, Hyd, Low08, Of08e45/Of08str, 024.0, 2-61
Hose, Hyd, Low08, Of08e90/Of08str, 024.0, 2-61
Hose, Hyd, Low08, Of08e90/Of08str, 032.0, 2-61
Hose, Hyd, Med04, Jf04e45/Jf04str, 018.0, 2-61
Hose, Hyd, Med04, Jf04e90/Jf04str, 088.0, 2-61
Hose, Hyd, Med04, Of04e45/Of04str, 018.0, 2-61
Hose, Hyd, Med04, Of04e90/Of04str, 088.0, 2-61
Hose, Hyd, Med06, Jf06e45/Jf06str, 021.0, 2-61
Hose, Hyd, Med06, Jf06e90/Jf06str, 068.0, 2-61, 3-21
Hose, Hyd, Med06, Jf06e90/Jf06str, 100.0, 2-61, 3-21
Hose, Hyd, Med06, Jf06str/Jf06str, 030.0, 2-61
Hose, Hyd, Med06, Jf06str/Jf06str, 042.0, 2-61
Hose, Hyd, Med06, Of06e45/Of06str, 021.0, 2-61
Hose, Hyd, Med06, Of06e90/Of06str, 068.0, 2-61, 3-21
Hose, Hyd, Med06, Of06e90/Of06str, 100.0, 2-61, 3-21
Hose, Hyd, Med06, Of06str/Of06str, 030.0, 2-61
Hose, Hyd, Med06, Of06str/Of06str, 042.0, 2-61
Hose, Hyd, Suc12, Jf12e90/Jf12str, 024.0, 2-61
Hose, Hyd, Suc12, Of12e90/Of12str, 024.0, 2-61
Hose, Hyd, Tc04, Jf04str/Jf04e90, 070.0, 2-61
Hose, Hyd, Tc04, Jf04str/Jf04str, 020.0, 3-21
Hose, Hyd, Tc04, Jf04str/Jf04str, 028.0, 3-21
Hose, Hyd, Tc04, Of04str/Of04e90, 070.0, 2-61
Hose, Hyd, Tc04, Of04str/Of04str, 020.0, 3-21
Hose, Hyd, Tc04, Of04str/Of04str, 028.0, 3-21
Hose, Hyd, Tc06, Jf06e90/Jf06str, 024.0, 2-61
Hose, Hyd, Tc06, Jf06e90/Jf06str, 034.0, 2-61
Hose, Hyd, Tc06, Jf06e90/Jf06str, 086.0, 3-21
Hose, Hyd, Tc06, Jf06e90/Jf06str, 096.0, 3-21
Hose, Hyd, Tc06, Jf06str/Jf06str, 020.0, 2-61
Hose, Hyd, Tc06, Of06e90/Of06str, 024.0, 2-61
Hose, Hyd, Tc06, Of06e90/Of06str, 086.0, 3-21
Hose, Hyd, Tc06, Of06e90/Of06str, 34.0, 2-61
Hose, Hyd, Tc06, Of06str/Of06str, 020.0, 2-61
Hose, Vacuum, 0.16id X 060.0l, 2-55
Housing, 4-3
Housing Wldt, Fan, 2-45
Housing, Brg, Drive,Brush, 2.5d 2.0b 5.0, 2-35
Housing, Fan, Rear, Impeller, 2-45
Housing, Flng, Brg, 2-45
Housing, Upper, Gearbox, Drive Wheel, 2-29
Hub, Adapter, Brush, 1.00b, 2-41, 3-17
Hub, Guide, End, Actuator, 2-37

I

Impeller, 9.00d X 1.40w X 0.376b, 2-45
Instr, Use&Care, Wallchart [Ts20] (ONLINE ONLY), 3-31
Instr. Repair Info, Motor, 4-3
Instr. Valve Repair Info, 4-5
Insulation, Acstc, 3-7
Insulation, Acstc, 0.5, 04.6 X 04.4, 2-45
Insulation, Acstc, 0.5, 08.6 X 03.6, 2-45
Insulation, Acstc, 0.5, 08.6 X 04.2 Ntch, 2-45
Insulation, Acstc, 0.5, 08.6 X 04.6 Ntch, 2-45
Insulation, Acstc, 0.5, 08.7 X 04.2 Ntch, 2-45
Insulation, Acstc, 0.5, 13.0 X 17.8 Ntch, 2-11
Insulation, Acstc, 0.5, 15.4 X 20.5 Ntch, 2-11
Insulation, Acstc, 0.5, 2.3 X 11.1 Ntch, 2-11
Insulation, Acstc, 0.5, 21.4 X 20.6 C–O, 2-11
Insulation, Acstc, 0.5, 21.5 X 12.2 Ntch, 2-11
Insulation, Acstc, 0.5, 31.6 X 14.1 Ntch, 2-11
Insulation, Acstc, 0.5, 32.0 X 21.6 Ntch, 2-11
Insulation, Acstc, 0.5, 4.5 X 11.0 Ntch, 2-11
Insulation, Acstc, 0.5, 9.2 X 11.8 Ntch, 2-11
Insulation, Acstc, 0.8, 06.6 X 03.0 Slit, 2-11
Insulation, Acstc, 2.0, 02.0 X 12.0, 2-5
Insulation, Acstc, Rnd, 0.8, 02.5d 0.5h, 2-21

K

Key–Wdruff 0.16 0.662 Asa#0505, 4-7
Key, Ignition [Set Of 2], 2-19
Key, Sq, 0.12 X 0.12, 1.00l, 2-45
Key, Sq, 0.19 X 0.19, 1.38l, 2-37
Key, Sq, 0.25 X 0.25, 1.00l, 2-35
Key, Woodruff, 0.19 0.75 [Asa0606], 2-45
Kit, Detent In, 4-5
Knob, 1.12d 3.86l M10 X 1.5, Plstc Tpr], 2-31, 2-39
Knob, Star, 2.75d 4ear 1.1l M8x1.25, 2-57
Knob, Tee, 0.38–16, 2.5 X 1.0 1.1l,Plstc, 2-21

L

Label Set, Opertnl [S20 Ele], 2-78
Label [Cyclone, Sweepmax S20], 2-78
Label Set, Info/Hzrd [S20], 2-78
Label, Model [S20], 2-78

Lamp, Bulb, 2-13
Latch, 2-15, 2-51, 3-11
Latch, Door, 2-49
Latch, Door [Southco 91-562-07], 2-57
Latch, Paddle, Rwk, 2-17
Latch, Swell, 2-7, 2-9
Lead Assembly Kit, 4-7, 4-8
Lens, Amb, F/ Revl / Flasher, 2-13
Lens, Blu, F/ Revl / Flasher, 2-13
Lens, Red, F/ Revl / Flasher, 2-13
Lever, Adj, Metal, 2-39, 3-15
Lever, Adj, Plstc, 2-31
Lever, Brush Lift, 2-31
Lever, Stop, Brake, 2-25
Lever, Vacfan, 2-43
Light, Led, 36vdc, 4.8d [Sealed Beam], 2-13
Light, Panl, 36vdc, 1.1 X 1.0, 2-19
Light, Strobe, Amb, 12-48vdc, 2-13
Link Assy, Valve Handle, 2-64
Link, Lift, Main Brush, 2-31

M

Maint Kit, 400hr [S20 Ele], 1-1
Maint Kit, 800Hr [S20 Ele], 1-1
Manual, Oprtr [S20 Elec, Bg Ce], 3-31
Manual, Oprtr [S20 Elec, Cz Ce], 3-31
Manual, Oprtr [S20 Elec, De Ce], 3-31
Manual, Oprtr [S20 Elec, Dk Ce], 3-31
Manual, Oprtr [S20 Elec, Ee Ce], 3-31
Manual, Oprtr [S20 Elec, En Ce], 3-31
Manual, Oprtr [S20 Elec, Es Ce], 3-31
Manual, Oprtr [S20 Elec, Fi Ce], 3-31
Manual, Oprtr [S20 Elec, Fr Ce], 3-31
Manual, Oprtr [S20 Elec, Gr Ce], 3-31
Manual, Oprtr [S20 Elec, Hu Ce], 3-31
Manual, Oprtr [S20 Elec, It Ce], 3-31
Manual, Oprtr [S20 Elec, Lt Ce], 3-31
Manual, Oprtr [S20 Elec, Lv Ce], 3-31
Manual, Oprtr [S20 Elec, Nl Ce], 3-31
Manual, Oprtr [S20 Elec, No Ce], 3-31
Manual, Oprtr [S20 Elec, Pl Ce], 3-31
Manual, Oprtr [S20 Elec, Pt Ce], 3-31
Manual, Oprtr [S20 Elec, Ro Ce], 3-31
Manual, Oprtr [S20 Elec, Ru Ce], 3-31
Manual, Oprtr [S20 Elec, Se Ce], 3-31
Manual, Oprtr [S20 Elec, Si Ce], 3-31
Manual, Oprtr [S20 Elec, Sk Ce], 3-31
Manual, Oprtr [S20 Elec, Tr Ce], 3-31
Manual, Parts [S20 Elec, En Ce], 3-31
Manual, Service [S20 Gas/Lpg/Dsl, En], 3-31
Mirror, Convex, 06.7 X 06.2, 3-5, 3-7
Mirror, Flat, 05.0d, 3-5, 3-7
Molding, Afmkt, Trim, Pvc, .18 .31, 08Ft, 3-5, 3-7
Molding, Trim, Pvc, .08-.11 39.2l, 3-27
Motor, Ele, 36vdc 2130rpm 2.10hp (See Breakdown), 2-29
Motor, Ele, 36vdc 2300rpm 4.00hp (See Breakdown), 2-37
Motor, Ele, 36Vdc 2315Rpm 0.10Hp 08.9A, 2-57
Motor, Electric, 36VDC 2.1 HP, 4-7
Motor, Electric, 36VDC 4.0 HP, 4-8
Motor, Hyd Gear In 08.9 B 1500, 4-3
Motor, Hyd, Gear, Int 08.9 Bi-Dir 1500, 2-41, 3-17
Motor, Hyd, Gear, Int 08.9 Bi-Dir 1500 (See Breakdown), 2-41, 3-17
Motor, Hyd, Gear, Int 08.9 Bi-Dir 1500 (See Breakdowns), 2-41
Muffler Wldt, Fan, 2-45

N

Nut, Hex, Flexlock, .31-24, Thin, 2-45
Nut, Hex, Flexlock, .38-24, 2-45
Nut, Hex, Flexlock, .50-13, Thin, 2-41, 3-17
Nut, Hex, Flng, M10 X 1.50, 2-47, 2-67
Nut, Hex, Flng, M12 X 1.75, 2-5, 3-5, 3-7
Nut, Hex, Flng, M8 X 1.25, 2-5, 2-11, 2-13, 2-19, 2-23, 2-43, 2-47, 2-51, 2-55, 2-63, 2-67, 3-5, 3-7
Nut, Hex, Jam, .25-28, 2-25
Nut, Hex, Jam, .31-24, 2-43
Nut, Hex, Jam, .50-13, 2-15
Nut, Hex, Jam, M20 X 1.5, 2-21
Nut, Hex, Lock, .25-20, Nl, Ss, 2-9
Nut, Hex, Lock, .31-18, Nl, 2-11, 2-15
Nut, Hex, Lock, .31-24, Nl, 2-7
Nut, Hex, Lock, .38-16, Nl, 2-37, 2-45
Nut, Hex, Lock, .38-16, Nl, Thin, 2-35
Nut, Hex, Lock, .75-10, Nl, 2-27, 2-35
Nut, Hex, Lock, #06-32, Nl, 2-43
Nut, Hex, Lock, #10-32, Nl, 2-57
Nut, Hex, Lock, M10 X 1.5, Nl, 2-23, 2-35, 2-37, 2-39, 2-47, 2-49
Nut, Hex, Lock, M12 X 1.75, Nl, 2-25, 2-35, 2-47
Nut, Hex, Lock, M14 X 1.50, Nl, 2-29
Nut, Hex, Lock, M16 X 2.00, Nl, 2-41, 3-17
Nut, Hex, Lock, M4 X 0.70, Nl, 2-55, 2-57, 3-9
Nut, Hex, Lock, M5 X 0.80, Nl, 2-13, 2-19, 2-25, 2-55, 3-11
Nut, Hex, Lock, M6 X 1.00, Nl, 2-13, 2-15, 2-19, 2-21, 2-23, 2-25, 2-43, 2-45, 2-49, 2-51, 2-55, 2-64, 3-5, 3-7, 3-11, 3-15, 3-27
Nut, Hex, Lock, M8 X 1.25, Nl, 2-5, 2-13, 2-25, 2-31, 2-35, 2-39, 2-47, 2-49, 2-53, 2-55, 2-57, 2-63, 2-67, 3-11, 3-15, 3-23, 3-25
Nut, Hex, Lock, M8 X 1.25, Nl, Ss, 2-29, 2-41, 3-17
Nut, Hex, Sltd, .75-16, 2-25, 2-27, 2-35
Nut, Hex, Std, .25-28, 2-33
Nut, Hex, Std, .38-16, 2-23
Nut, Hex, Std, .75-16, 2-27
Nut, Hex, Std, #10-32, Ss, 2-5
Nut, Hex, Std, 10-32, 2, 2-43
Nut, Hex, Std, M10 X 1.50, Ss, 2-35
Nut, Hex, Std, M3 X 0.50, 8, 2-19
Nut, Hex, Std, M6 X 1.00, 8, 2-23, 2-39
Nut, Hex, Std, M6 X 1.00, Ss, 2-41, 3-15, 3-17
Nut, Short, 4-9, 4-10
Nut, Wheel, M14-1.5, 2-29

O

Ohg Kit, Ci [S20], 3-5
Oil, Hyd [El, Iso 32, 01Gal], 1-1

P

Pad, Pedal, Brake, 3.96l 2.36w 0.75, 2-25
Pad, Wear, Pye, 1.25d 1.0l, 2-27
Pane Assy, Windshield, 3-9
Panel Assy, Cab, 3-9
Panel Assy, Indicator Light, Ele, 2-19
Panel Wldt, Frame, Cab, 3-9
Panel Wldt, Frame, Rear, 3-9
Panel Wldt, Top, Ohg, 3-5, 3-7
Panel, Louver, 2-11
Panel, Muffler, Fan, 2-45
Panel, Oprtr Station, W/ Label, Ce [S20e], 2-19
Pedal Wldt, Brake, 2-25
Pedal Wldt, Propel, Lower, Adj, 2-23
Pedal, Propel, Adj, Upper, 2-23
Pin, 4-6
Pin Assy, Clevis, Hppr Lift, 2-47
Pin Assy, Side Brush W/ Clip, 2-41, 3-17
Pin, 0.75d 02.0l, 1/.31h, Stl, 2-47
Pin, 1.25d 04.0l, 1/.34h, Stl, 2-47
Pin, Clevis, 0.25d X 0.75l, 2-25, 2-33, 2-41, 3-15, 3-17
Pin, Clevis, 0.31d X 1.62l, 3-15
Pin, Clevis, 0.37d X 0.75l, 2-41, 3-17
Pin, Clevis, 0.37d X 1.00l, 2-33
Pin, Clevis, 0.37d X 1.50l, 3-15
Pin, Clevis, 0.37d X 2.00l, 2-39
Pin, Clevis, 0.37d X 2.12l, 2-39
Pin, Clevis, 0.37d X 3.50l, 2-23
Pin, Clevis, 0.37d X 6.12l, 2-37
Pin, Clevis, 0.50d X 1.25l, 2-31
Pin, Clevis, 0.50d X 2.25l, 2-55
Pin, Clevis, 0.50d X 3.00l, 2-45
Pin, Clevis, 0.50d X 3.50l, 2-23
Pin, Clevis, 0.50d X 6.00l, 2-55
Pin, Cotter, .062 X 0.50, 2-25
Pin, Cotter, .094 X 0.75, 2-33
Pin, Cotter, .094 X 1.00, 2-43
Pin, Cotter, .125 X 0.75, 2-43
Pin, Cotter, .125 X 1.00, 2-23, 2-25, 2-55
Pin, Cotter, .125 X 1.25, 2-27, 2-35, 2-45, 3-15
Pin, Cotter, .187 X 1.75, 2-47
Pin, Cotter, .250 X 1.25, 2-47
Pin, Cotter, Hair, 0.31D .058 Wir, 2-11, 2-33, 2-37, 2-41, 3-15, 3-17
Pin, Cotter, Hair, 0.38d .072 Wir, 2-5
Pin, Cotter, Hair, 0.38d .093 Wir, 2-23, 2-31, 2-39
Pin, Dowel, 0.3127d X 1.00l, 2-29
Pin, Hitch, .500d X 6.00l, Pl, 3-13
Pin, Roll, .094d X 0.87l, .094/.097, 2-49
Pin, Roll, .250d X 0.75l, .250/.256, 2-47
Pin, Roll, .250d X 2.00l, .250/.256, 2-35
Pin, Roll, .250d X 3.50l, .250/.256, 2-35
Pivot Wldt, 3-15
Pivot Wldt, Sba, 3-15
Plate Wldt, 3-15
Plate Wldt, Back, Hppr, 2-55
Plate Wldt, Damper, 2-43
Plate Wldt, Lh, 2-11

Plate Wldt, Perma-Filter, 2-57
Plate Wldt, Pivot, 2-49
Plate Wldt, Rh, 2-11
Plate, Backing, Brake, 2-25
Plate, Component, Ele, W/Label [S20] Ce, 2-67
Plate, Cover, Muffler, 2-45
Plate, Grommet, Taillight, Ele, 2-5
Plate, Idler, Adjmt, 2-37
Plate, Mtg, 2-21
Plate, Mtg, Latch, 2-17
Plate, Mtg, Light, 2-13
Plate, Mtg, Pin, 2-47
Plate, Pivot, Lift, Auto, 2-33
Plate, Retainer, Headlight, 2-49
Plate, Seal, 2-9
Plate, Shield, Top, 3-9
Plate, Spacer, Lift Arm, 2-47
Plate, Sppt, Bmpr, 2-49
Plate, Sppt, Headlight, 2-49
Plate, Sppt, Hinge, 3-11
Plate, Wear, 2-49, 4-6
Plug & O-Ring, 4-5
Plug Assy, Hyd, 2-64
Plug Assy,Byd, 4-5
Plug Gage #6, 4-5
Plug Wldt, Drive, Brush, 2-35
Plug Wldt, Idler, Brush, 2-35
Plug, Gearbox, Drive Wheel, 2-29
Plug, Hole, Rnd, 0.22H .00-.06, Blk Nyl, 3-5, 3-7
Plug, Hole, Rnd, 0.25h .03-.12, Blk Nyl, 3-9
Plug, Hole, Rnd, 0.25h 0.8l, Brb, Nyl, 2-47
Plug, Hole, Rnd, 0.38h .3l, Plstc, 3-9
Plug, Hole, Rnd, 0.38h .4-.7, Blk Nyl, 2-5
Plug, Hole, Rnd, 0.44h .03-.12, Blk Nyl, 2-19
Plug, Hole, Rnd, 0.56h .03-.12, Blk Nyl, 2-5
Plug, Hole, Rnd, 0.75h .03-.12, Blk Nyl, 3-9
Plug, Hole, Rnd, 1.00h .14-.25, Blk Nyl, 3-9
Plug, Hole, Rnd, 1.37h 0.45l, Blk Nyl, 2-5
Plug, Hole, Rnd, 2.13h 0.6l, Blk Nyl, 2-5
Plug, Orifice, Valve, Hyd, .035, 4-10
Plunger, 4-5
Power Cord, Uk [Bc5,Bc7,Os|3], 3-28
Pulley, Cable, 1.5d Nyl, 2-39, 3-15
Pulley, Cable, 2.5d 0.50b, .22d Cable, 2-33
Pulley, Cable, 3.0d 1.76b, .25d Cable, 2-47, 3-15
Pulley, Idler W/ Bearing, Plstc, 2-37
Pump, Hyd, Gear, Ext, 2, 00.45 3000, Cw, 2-37

R

Race Thrust, 4-3
Race, Bearing, 4-6
Relay, 36vdc, 005a, Spdt No [Greenwich], 2-19
Relay, 36vdc, 100a, Spdt No [Cabelform], 2-67
Repair Info, 4-6
Reservoir, 02.8gal, W/ Label [6400e], 2-63
Resistor, 040.000hm, 0040watt, 2-19
Resistor, Ele, Plug, 2-67
Retainer, Front, 4-6
Retainer, Ring, Brake, 2-25
Retainer, Seal, Dust, .12 X 0.8w X 33.6l, 2-57
Retainer, Seal, Hppr Door, Side, 2-55
Retainer, Seal, Hppr, Top, 2-5
Retainer, Skirt, 3-23, 3-25
Retainer, Skirt, .12, 1.0w X 08.1l, Pl, 2-5, 2-9
Retainer, Skirt, .12, 1.0w X 10.4l, Pl, 2-5
Retainer, Skirt, .12, 1.0w X 19.3l, Pl, 2-7
Ring, Retaining, 4-5, 4-6
Ring, Retaining, Ext, 0.38d, [Klipring], 2-39
Ring, Retaining, Ext, 0.50d, Hd, 2-21
Ring, Retaining, Ext, 0.98d, [E-Ring], 2-47
Ring, Retaining, Ext, 0.98d, Basic, 2-35
Ring, Retaining, Int, 1.63d, 2-27
Ring, Retaining, Int, 2.00d, 2-47
Ring, Steering, 2-29
Rivet, Plstc, .250d X 0.90, 2-5
Rod, 2-25
Rod Wldt, Damper, 2-43
Rod Wldt, Safety, Hppr Cover, 2-51
Rod-End, 0.75-16rh Mal 0.75b [Teflon], 2-27
Rod, Latch, Tilt, Steering, 2-21
Rod, Thrd, 2 End, M06 X 1.0 02.2l, 2-23

S

Sbdc Kit, W/O Lh Side Brush, Ci [S20], 3-23
Screw, 4-3
Screw, Btn, M8 X 1.25 X 16, Ss, 2-11, 2-47
Screw, Flt, M12 X 1.75 X 80, 10.9, 2-35
Screw, Flt, Soc, .50-13 X 2.50, Al, 2-41, 3-17
Screw, Flt, Soc, M10 X 1.50 X 25, Ss, 2-35
Screw, Flt, Soc, M6 X 1.00 X 25, 10.9, 2-49
Screw, Flt, Soc, M8 X 1.25 X 16, 10.9, 2-33
Screw, Flt, Soc, M8 X 1.25 X 20, 18-8,Ss, 2-55
Screw, Hex, .25-20 X 0.50, G5, 2-67
Screw, Hex, .25-20 X 0.75, Sems, 2-15
Screw, Hex, .25-20 X 1.00, G5, 3-11
Screw, Hex, .31-12 X 1.50, Fmg [Ab], 2-41, 3-17
Screw, Hex, .31-18 X 2.25, G5, 2-15
Screw, Hex, .38-16 X 0.75, G5, 2-21
Screw, Hex, .38-16 X 1.00, Nl, 2-63
Screw, Hex, .38-16 X 1.25, Nl, 2-41, 3-17
Screw, Hex, .38-16 X 1.50, Fl, 2-23
Screw, Hex, .38-16 X 1.50, G5, 2-35
Screw, Hex, .38-16 X 2.00, G5, 2-37
Screw, Hex, .50-13 X 0.75, G5, 2-13
Screw, Hex, .50-13 X 2.50, G5, 2-15
Screw, Hex, .75-10 X 3.00, G5, 2-27
Screw, Hex, 06-20 X 0.50, Fmg/Ab, Pl, 2-45
Screw, Hex, 06-32 X 0.75, Fmg, Pl, 2-67
Screw, Hex, M10 X 1.50 X 100, 8.8, 2-47
Screw, Hex, M10 X 1.50 X 20, 8.8, 2-57, 2-65, 3-19
Screw, Hex, M10 X 1.50 X 20, Ss, 2-33
Screw, Hex, M10 X 1.50 X 25, 8.8, 2-37
Screw, Hex, M10 X 1.50 X 25, Ss, 2-41, 2-47
Screw, Hex, M10 X 1.50 X 30, Ss, 2-49
Screw, Hex, M10 X 1.50 X 35, 9.8, Sems, 2-37, 2-45, 2-49, 2-53, 2-67, 3-13, 3-17
Screw, Hex, M10 X 1.50 X 60, 8.8, 2-23
Screw, Hex, M10 X 1.50 X 70, Fl, Ss, 2-35
Screw, Hex, M12 X 1.75 X 120, 8.8, 2-47
Screw, Hex, M12 X 1.75 X 30, 8.8, 2-29, 3-5, 3-7
Screw, Hex, M12 X 1.75 X 35, 8.8, 2-25
Screw, Hex, M12 X 1.75 X 40, 8.8, 2-5
Screw, Hex, M16 X 2.00 X 20, 8.8, 2-35
Screw, Hex, M16 X 2.00 X 90, 8.8, 2-41, 3-17
Screw, Hex, M4 X 0.70 X 20, Fmg, 2-17
Screw, Hex, M5 X 0.80 X 10, Fmg, 2-11
Screw, Hex, M5 X 0.80 X 16, 8.8, 2-55
Screw, Hex, M5 X 1.0 X 16, Blk, 2-25
Screw, Hex, M6 X 1.00 X 10, 8.8, 3-15
Screw, Hex, M6 X 1.00 X 12, 8.8, 2-15, 2-25
Screw, Hex, M6 X 1.00 X 12, Fmg, 2-37, 2-45, 2-47, 2-55, 2-57, 2-67, 3-11
Screw, Hex, M6 X 1.00 X 16, 8.8, 3-11
Screw, Hex, M6 X 1.00 X 16, Fmg, 2-49, 3-5, 3-7, 3-9
Screw, Hex, M6 X 1.00 X 16, Nl, Ss, 2-11
Screw, Hex, M6 X 1.00 X 20, 8.8, 2-23, 2-43, 2-45, 3-5, 3-7
Screw, Hex, M6 X 1.00 X 20, 9.8, Sems, 2-19, 3-23, 3-25
Screw, Hex, M6 X 1.00 X 20, Fmg, 2-47, 2-55, 3-23, 3-25
Screw, Hex, M6 X 1.00 X 20, Ss, 3-27
Screw, Hex, M6 X 1.00 X 25, 9.8 Sems, 2-21, 2-35, 2-55
Screw, Hex, M6 X 1.00 X 25, 9.8, Sems, 2-17, 2-43, 2-51
Screw, Hex, M6 X 1.00 X 50, 8.8, 2-13, 2-25, 2-64
Screw, Hex, M8 X 1.25 X 16, 8.8, 2-51, 2-57
Screw, Hex, M8 X 1.25 X 16, Nl, Ss, 2-9, 2-49
Screw, Hex, M8 X 1.25 X 16, Ss, 2-15, 2-17, 2-55
Screw, Hex, M8 X 1.25 X 20, 8.8, 2-11, 2-67
Screw, Hex, M8 X 1.25 X 20, Fmg, 3-5, 3-7, 3-9, 3-11
Screw, Hex, M8 X 1.25 X 20, Nl, Ss, 2-35
Screw, Hex, M8 X 1.25 X 20, Ss, 2-5, 2-35, 3-23, 3-25
Screw, Hex, M8 X 1.25 X 20, Ss, Sems, 2-7, 2-25, 2-47, 2-67
Screw, Hex, M8 X 1.25 X 25, 8.8, 2-5, 2-67
Screw, Hex, M8 X 1.25 X 25, 9.8, Sems, 2-5, 2-9, 2-11, 2-13, 2-15, 2-17, 2-19, 2-23, 2-51, 2-55, 2-57, 2-67, 3-9, 3-15, 3-23, 3-25
Screw, Hex, M8 X 1.25 X 25, Ss, 2-41, 3-17
Screw, Hex, M8 X 1.25 X 30, 8.8, 2-39, 3-15

Screw, Hex, M8 X 1.25 X 30, 9.8, Sems, 2-5, 2-19, 2-31, 2-33, 2-37, 2-43, 2-49, 2-55, 2-63, 3-5, 3-7
Screw, Hex, M8 X 1.25 X 35, 8.8, 2-11, 2-33, 3-15
Screw, Hex, M8 X 1.25 X 35, 9.8, Sems, 2-25, 2-47, 2-49, 2-57, 3-11, 3-23
Screw, Hex, M8 X 1.25 X 40, 8.8, Fl, 2-53
Screw, Hex, M8 X 1.25 X 40, Ss, 2-55
Screw, Hex, M8 X 1.25 X 45, 10.9, 2-29
Screw, Hex, M8 X 1.25 X 45, 8.8, 2-31
Screw, Hex, M8 X 1.25 X 50, 8.8, 2-29
Screw, Hex, M8 X 1.25 X 60, 8.8, 2-39, 2-47
Screw, Hex, M8 X 1.25 X 80, 8.8, 2-29
Screw, Pan, 06- X 0.38, F/ Plstc, 2-57
Screw, Pan, 12-16 X 0.50, F/ Plstc, 2-11, 3-27
Screw, Pan, Phl, .31-18 X 1.00, G2, 2-11
Screw, Pan, Phl, 06-32 X 1.00, G1, 2-43
Screw, Pan, Phl, 08-16 X 1.00, F/ Plstc, 2-49
Screw, Pan, Phl, 08-32 X 0.38, G1, 2-43
Screw, Pan, Phl, 10-14 X 0.75, F/ Plstc, 2-57
Screw, Pan, Phl, 10-32 X 0.50, G2, Blk, 2-19
Screw, Pan, Phl, M3 X 0.5 X 25, Blk, 2-19
Screw, Pan, Phl, M4 X 0.70 X 10, Ss, 2-57
Screw, Pan, Phl, M4 X 0.70 X 16, 4.8, 2-55, 3-9
Screw, Pan, Phl, M4 X 0.70 X 16, Ss, 2-57
Screw, Pan, Phl, M5 X 0.80 X 12, Ss, 2-13, 2-19, 2-49, 2-51
Screw, Pan, Phl, M5 X 0.80 X 16, 4.8, 2-13
Screw, Pan, Phl, M5 X 0.80 X 25, 4.8, 3-11
Screw, Pan, Phl, M6 X 1.00 X 10, Ss, 2-47
Screw, Pan, Phl, M6 X 1.00 X 40, Ss, 3-15
Screw, Set, .25-20 X 0.31, Nl, 2-37
Screw, Set, Soc, .25-20 X 0.75, Al, 2-45
Screw, Set, Soc, 10-24 X 0.38, Al, 2-57
Screw, Set, Soc, M5 X 0.80 X 8, Pl [45h], 2-23
Screw, Soc, .25-20 X 1.00, Al, 2-37
Screw, Soc, M8 X 1.25 X 25, 12.9, 2-23
Screw, Soc, M8 X 1.25 X 70, 12.9, 2-27
Seal, 1-1, 2-5, 2-7, 2-9, 2-55, 4-7
Seal Assy, Pre-Filter, 2-57
Seal Kit, 4-6
Seal Kit, Cartridge, 4-10
Seal Kit, Cyl, Hyd [1040694], 2-47
Seal Kit, Hsng, 4-9, 4-10
Seal Kit, Motor A/H-Stnd, 4-3
Seal Kit, Pump, Hyd, 2-37
Seal Kit, Valve, Hyd, 4-9, 4-10
Seal Kit, Vlv, 4-5
Seal, .19, .25w 39.2l, Adh, 3-9
Seal, Afmkt, Bulb, Str, .75d F/07ga 08ft, 3-9
Seal, Afmkt, Bulb, Str, 0.58D 08Ft, 3-11
Seal, Bulb, 90, 0.50d .06-.09grip 022.5l, 2-11
Seal, Bulb, 90, 1.33 .06-.09grip 032.5l, 2-11
Seal, Bulb, Str, 0.50d .13grip 009.4l, 2-7
Seal, Cover, 2-47
Seal, Door, Access, 2-49
Seal, Door, Dump, Side, 1-1
Seal, Firewall, 2-5
Seal, Foam, 2-57
Seal, Hppr, .06 12.5w 36.6l Neo, 1-1, 2-5
Seal, Inlet, Vacuum, 1-1, 2-43
Seal, Org, 2-29
Seal, Org, .078 X 00.47id 06, 4-10
Seal, Org, .139 X 02.98id, 2-29
Seal, Rbr, .13 6.34w 36.3l, 12/.28h, Red, 1-1, 2-55
Seal, Rbr, 0.06, Tube, Vacuum Wand, 3-27
Seal, Rbr, Clsd, 0.13, Door, Dump, Side, 2-55
Seal, Rbr, Clsd, 0.38, Instmt Panl, 2-19
Seal, Rbr, Damper, 0.06th, 04.1d, 2-43
Seal, Rbr, Open, 0.38, 1.25w 25.5l, 2-7
Seal, Top, Lh, Sbdc, 3-23, 3-25
Seal, Top, Sbdc, 3-23, 3-25
Seal, Ure, 0.50, 0.75w 04.0l Adh, 2-45
Seat, Suspension [Grammer Gs12], 2-11
Seatbelt, 60.0L, 2-11
Shaft, 2-35
Shaft Assy, Brg, 2-45
Shaft Wldt, Brush, 2-25
Shaft, Idler, Plug, Brush, 2-35
Shaft, Impeller, 2-45
Shaft, Output, 4-3
Shaft, Pivot, Arm, Brush Drive, 2-35
Shaft, Pivot, Steering, 2-27
Sheave, 01grv, 01.9pd 0.62b [07m], 2-45
Sheave, 01grv, 04.7pd 0.97b [3v], 2-35
Sheave, 02grv, 05.6/2.9pd 2.0b [3v], 2-35
Sheave, 02grv, 06.5/3.7pd 1.50b [3v], 2-37
Sheave, Flat, 3.0d 0.75w 0.67brg, 2-35
Sheave, Step [3V/7M.877], 2-37
Shoe, Brake, 180 X 30mm, 2-25
Shroud, Rear [S20], 2-11
Shroud, Rear, Trimmed, 2-11
Skirt, Brush, Side, Sbdc, 3-23, 3-25
Skirt, Brush, Side, Sbdc [W/O Lhsb], 3-23
Skirt, Neo, .12 2ply, Dust-Cntrl, 1-1, 2-49
Skirt, Neo, .12, 05.20w 36.10l, 06/ Sl, 2-49
Skirt, Neo, .12, 12.26w 14.50l, 07/ Sl, 1-1, 2-5
Skirt, Sbdc, Sba, Lh, 3-25
Sleeve, 0.32b 0.50d 0.3l, 2cham, Ss, 2-39, 2-41, 3-15, 3-17
Sleeve, Nyl, 1.22id 35.0l, 2-21, 2-27
Sleeve, Nyl, 1.63id 25.0l, 2-41, 3-17
Sleeve, P/M, 0.25b 0.44d 0.2l, Pl, 2-43
Sleeve, P/M, 0.32b 0.50d 0.3l [430ss], 2-11
Sleeve, P/M, 0.32b 0.50d 0.5l [430ss], 2-33, 2-39, 3-15
Sleeve, P/M, 0.34b 0.63d 0.4l, Ss / Oil, 2-31, 2-33
Sleeve, P/M, 1.25b 1.75d 0.7l [430ss], 2-47
Snap-Ring, 4-7, 4-8
Solenoid Assy, Pull, 36vdc, 2-43
Solenoid Kit, 36vdc, Replmt [Thrmsentry], 2-43
Solenoid, #10, 36vdc, 4-9, 4-10
Solenoid, #8, 36vdc, 4-10
Solenoid, Cntrl, 4-10
Spacer, 2-27, 2-33, 4-5, 4-6
Spacer Plate, 4-3
Spacer, 0.56b 0.88d 1.82l, Pl, 2-55
Spacer, Fltr, 2-57
Spacer, Plstc, 0.41b 2.25d 1.30l, Nyl, 2-23
Spindle, Adjustment, 2-11
Spring, 4-5
Spring Kit, 4-6
Spring, Cmpr, 0.60od .07wir 00.8l, 2-9
Spring, Cmpr, 0.72od .06wir 02.3l, 2-21
Spring, Dsl, 1.00od 0.50id 1.25l, 2-41, 3-17
Spring, Dsl, 1.25od 0.62id 1.80l, 2-41, 3-17
Spring, Extn, 2-33
Spring, Extn, 0.38od 0.05wir 02.5l, 2-64
Spring, Extn, 0.75od 0.11wir 04.5l, 2-41, 3-17
Spring, Extn, 0.96od 0.05wir 01.4l, 2-43
Spring, Extn, 1.25od 0.15wir 06.0l, 2-45
Spring, Flat, .06, 0.75w X 01.8l, 2/.28h, 2-15
Spring, Flat, .06, 0.75w X 07.8l, 2-23
Spring, Tens, 2-55
Spring, Tors, 0.81id .12wir 08.0coil, 2-15
Spring, Tors, 1.03id .11wir 03.0coil, 2-39
Spring, Wir, 0.08d, Parking Brake, 2-25
Spring, Wir, 0.25d, Brake Return, 2-25
Stand-Off, Wir, M6, Insulator, Panel, 2-67
Steer-Control, Hyd04, 07.3 0600 (See Breakdown), 2-21
Strainer, Hyd, 010gpm 100mesh, 1-1, 2-63
Strainrelief, 2-57
Strap Wldt, Tank, Hyd, 2-63
Strap, Brd,Ground, 1.5mm X 23mm X 200mm, 2-67
Strap, Rbr, 2-57
Strap, Static, W/Grommet, .19 1.1w 25.0l, 2-5
Strip Wldt, Seal, Door, 2-55
Strip, Retainer, 2-55
Strip, Retainer, Dump Door, 2-55
Strip, Retainer, Flap, 2-5
Strip, Retainer, Hppr Lip, 2-49
Stud, M8 X 1.25 [55.0], 2-57
Stud, Spcl, 2-35
Support Wldt, Rh, Sbdc, 3-23, 3-25
Support Wldt, Lh, Sbdc, 3-25
Support, Hppr, Lip, Back, 2-53
Support, Hppr, Lip, Front, 2-53
Support, Hppr, Lip, Side, 2-53
Switch Assy, Press, No/Nc 0040Psi, 2-63
Switch, Ignition [Ku], 2-19
Switch, Press, Adj [4-16 In Wtr], 2-55
Switch, Push, Spst, No, 2-43
Switch, Rocker, 3 Position, 2-19
Switch, Safety, Shutoff, 2-19
Switch, Seat, 2-11
Switch, Snap, 15a No, 2-25
Switch, Snap, 15a No, Rlr, 2-55
Switch, Snap, 25a Spdt, 2-19
Switch, Temp, Sealed, Nc, 2-57

T

Taillight, 12vdc, 3.6 X 1.9, 2-5
Tape, Hook, 1.0w [Velcro], 3-9, 3-11
Throttle, Electronic, 0000/5000 Ohm, 2-23
Thrust Bearing, 4-3
Tie, Cable, Nyl, 07.3l .19w 1.8 Max D, 2-41, 2-49, 2-67, 3-17
Tie, Cable, Nyl, 11.4l .19w 3.0 Max D, 2-19, 2-21, 2-27

Tie, Cable, Nyl, 14.5l .30w 4.0 Max D, 2-5
Timer, 36vdc, 10a [Left Hand Side Brush], 3-15
Tire Assy, Idler, Swpr, Blk, 16.0x3.5, 2-25
Tire, Drive, Swpr, Blk, 16.0x4.0, 2-29
Tire, Drive, Swpr, Grey, 16.0x4.0 (Optional non-Marking), 2-29
Tray Wldt, Dust [Cyclone], 2-57
Tray, Dust, Shakr, 2-57
Tray, Mold, 2-57
Tread, Non-Skid, 01.4w 12.0l, 2-23
Tread, Non-Skid, 02.2w 15.5l, 2-23
Tread, Non-Skid, 06.5w 20.6l, 2-23
Tube Wldt, Torque, 2-35
Tube, 0.33id 0.51od 00.8l, Stl, Pl, 3-15
Tube, 0.34id 0.62od 00.2l, Stl, 2-25
Tube, 0.38id 0.75od 00.9l, Stl, 2-55
Tube, 0.38id 0.81od 00.4l, Stl, 2-45
Tube, 0.42id 0.62od 01.0l, Stl, Pl, 2-39
Tube, 0.77id 1.13od 00.6l, Stl, Pl, 2-27
Tube, Transition, Valve, Ev, 2-43

V

Valve, Check, 4-9, 4-10
Valve, Cntrl, Logic, 4-9, 4-10
Valve, Hyd Control Man, 4-5
Valve, Hyd, Mnl, 2spool 0100psi 10gpm (See Breakdown), 2-64
Valve, Hyd, Solenoid, 36vdc, 3-19, 4-9, 4-10
Valve, Hyd, Solenoid, 36vdc (See Breakdowns), 2-65
Valve, Hydraulic Steering 07.3 0600, 4-6
Valve, Relief, 4-9, 4-10
Valve, Stem, Hyd, 4-9, 4-10
Video, Oprtr, Dvd [S20 En, Es, Fr], 3-31

W

Wand Kit, Vacuum, Ci [S20], 3-27
Wand, Vacuum, W/ Label, Ce [S20], 3-27
Washer, 4-5
Washer Flat,0.50,Sae, 2-13, 2-15, 2-23, 2-25, 2-41, 2-55, 3-5, 3-7, 3-17
Washer, Flat, 0.25, Fendr, 2-55, 3-11
Washer, Flat, 0.25, Sae, 2-13, 2-23, 2-43, 2-67, 3-15
Washer, Flat, 0.25, Std, 2-11, 2-23, 2-43, 2-49, 2-55, 2-63, 2-67, 3-15, 3-23, 3-25, 3-27
Washer, Flat, 0.31, Fendr, 2-5, 2-9, 2-47, 2-49, 2-57, 3-11, 3-23, 3-25
Washer, Flat, 0.31, Sae, 2-7, 2-9
Washer, Flat, 0.31, Std, 2-5, 2-11, 2-13, 2-15, 2-17, 2-25, 2-31, 2-33, 2-35, 2-39, 2-49, 2-51, 2-53, 2-55, 2-57, 2-64, 2-67, 3-5, 3-7, 3-15
Washer, Flat, 0.31b 0.88d .12, Rbr, 2-64
Washer, Flat, 0.34b 0.69d .06, Nyl, 2-15
Washer, Flat, 0.38, Sae, 2-23, 2-35, 2-37, 2-63, 3-11
Washer, Flat, 0.38, Std, 2-33, 2-37, 2-39, 2-41, 2-45, 2-47, 2-49, 2-55, 2-57, 2-65, 3-17, 3-19
Washer, Flat, 0.38b 0.88d .08, Ss, 2-41, 3-17
Washer, Flat, 0.39b 0.75d .06, Nyl, 2-23
Washer, Flat, 0.40b 1.12d .12, Ss, 2-49, 2-55
Washer, Flat, 0.44, Std, 2-39
Washer, Flat, 0.53b 1.75d .12, Stl, Pl, 2-35
Washer, Flat, 0.62, Sae, 2-41, 3-17
Washer, Flat, 0.75, Sae, 2-27, 2-35
Washer, Flat, 0.76b 1.50d .06, Ss, 2-25
Washer, Flat, 08, 2-43
Washer, Flat, 1.02b 1.75d .12, Stl, 2-47
Washer, Flat, 10, 2-13, 2-19, 2-25, 2-49, 2-57
Washer, Flat, Belleville, .31, 3-11
Washer, Flat, Belleville, .38, 2-37
Washer, Flat, Belleville, .50, 2-47
Washer, Flat, M21.0b X 37d X 3, 2-25
Washer, Lock, Int-Ext, 0.25, 2-57
Washer, Lock, Int-Ext, 0.31, 2-5, 2-67
Washer, Lock, Int, 0.25, 2-67
Washer, Lock, Int, 0.31, 2-29, 2-43, 2-67
Washer, Lock, Int, 04, 2-19
Washer, Lock, Int, 10, 2-5
Washer, Lock, Int, 10, Ss, 2-43, 2-57
Washer, Sealing, M8, 2-31
Washer, Thrust, 0.53b 1.00d 0.03w[Fbrgl], 2-41, 3-17
Washer, Thrust, 0.61b 1.25d .06, Fgl, 2-41, 3-17
Washer, Wavy, 0.53b 0.81d .09, 2-35
Wavy Washer, 4-7, 4-8
Weight, Eccentric, Pntd, 2-57
Wheel, Steering, 14.0D 0.81B 36Tooth, 2-21