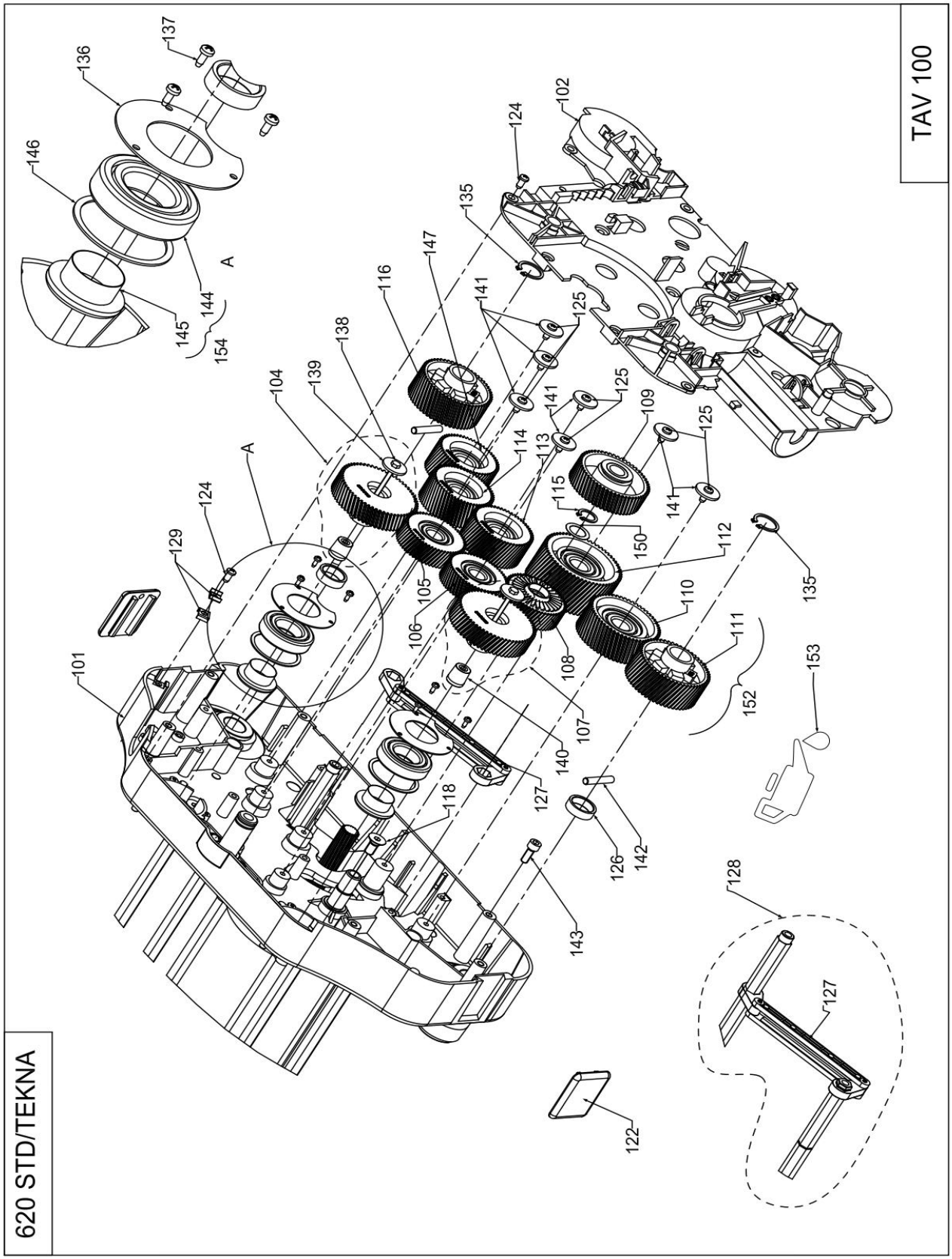
620 STD/TEKNA
TAV 100
101
102
104
105
106
107
108
109
110
111
112
113
114
115
116
118
122
124
125
126
127
128
129
135
136
137
138
139
140
141
142
143
144
145
146
147
150
152
153
154
A

Pos.	Article Code	Description		Price
101	181015000	MAIN SIDE ELEMENT (CYLINDRICAL BEARING)	FIANCATA PRINCIPALE CON SUPPORTI SPAZZOLA	€ 288,30
102	130501000	INSIDE CRANKCASE BLACK	CARTER INTERNO NERO	€ 28,51
104	060902000	GEAR W/NUT AND WASHER - SP737	INGR. CILIN. MOT. C/VITE-DADO-ROND. SP737	€ 12,74
105	054402000	GEAR W/ BEARING. M1,125 Z47 SP803 - PA6	INGRAN. C/CUSC. M1,125 Z47 SP803- PA6	€ 13,15
106	064402000	GEAR W/ BEARING. M1,125 Z47 SP740 - PA6	INGRAN. C/CUSC. M1,125 Z47 SP740- PA6	€ 12,04
107	050902000	GEAR W/ NUT AND WASHER - SP807	INGR. CILIN. MOT. C/VITE-DADO-ROND. SP807	€ 11,45
108	054602000	GEAR W/ BEARING DELRIN SP804	INGRANAGGIO DELRIN C/CUSC. SP804	€ 10,94
109	068002000	GEAR W/ BRASS BEARING DELRIN SP739	INGRANAGGIO DELRIN C/BRONZ. SP739	€ 10,13
110	065002000	GEAR W/ BEARING PA6. SP1385	INGRANAGGIO PA6 C/CUSC. SP1385	€ 13,88
111	054202000	GEAR W/O BEARING PA6. SP1377	INGRANAGGIO PA6 S/CUSC.SP1377	€ 8,70
111	S62004001_00	INGRANAGGIO SPAZZOLA SX RINFORZATO	REINFORCED LEFT BRUSH GEAR	€ 23,00
112	058002000	GEAR W/ BEARING PA6. SP 1389	INGRANAGGIO PA6 C/2CUSC. SP1389	€ 26,15
113	057003000	GEAR W/ BEARING PA6. SP411	INGRANAGGIO PA6 C/CUSC. SP411	€ 13,89
113	S62004012_00	INGRANAGGIO Z47 ALLUMNIO	ALUMN GEAR Z47	€ 19,86
114	064002000	GEAR W/ BEARING PA6. SP412	INGRANAGGIO PA6 C/CUSC. SP412	€ 13,89
115	113200000	SEEGER RING Ø14 ISO 7435	ANELLO SEEGER Ø14 ISO 7435	€ 0,28
116	064202000	GEAR W/O BEARING. PA6 SP1376	INGRAN. S/CUSC. PA6 SP1376	€ 8,80
116	S62004002_00	INGRANAGGIO SPAZZOLA DX RINFORZATO	REINFORCED RIGHT BRUSH GEAR	€ 23,00
118	111201000	SCREW TSPEI M8x16 ZN DIN 7991	VITE TSPEI M8x16 ZN DIN 7991	€ 0,79
122	131100000	MAIN FRAME BLACK BUMPER	PARACOLPI NERO	€ 1,86
124	110400000	SCREW. TC+ PH M5x10 ZN DIN 7500 C	VITE TRILOB. TC+ PH M5x10 ZN DIN 7500 C	€ 0,25
125	110600000	SCREW TC M5X12 ZN	VITE AUTOFORMANTE TC M5X12 ZN	€ 0,26
126	A42001003_00	SPACER KIT	ASSIEME SPESSORI SUPPORTO SPAZZOLA	€ 1,99
127	180801000	WHEEL LEVER MECHANISM	LEVISMO RUOTE ASSIEMATO	€ 23,33
128	012102000	LEVER MECHANISM620-550 W/ SHAFTS	LEVISMO RUOTE 620 C/ALBERI	€ 50,81
129	113901000	TERMINAL CONTACT	RONDELLA A PONTE MORSET. TERRA	€ 7,37
135	113400000	SEEGER RING Ø20 ISO 7435	ANELLO SEEGER Ø20 ISO 7435	€ 0,66
136	020600000	BEARING STOPPER METAL WASHER	RONDELLA PREMICUSCINETTO. SP=1	€ 3,96
137	110100000	SELF TAPPING SCREW TCB+ M3x8 DIN 7500 ZN	VITE AUTOFORMANTE TCB+ M3x8 DIN 7500 ZN	€ 0,17
138	111000000	SOCKET HEAD SCREW TE M4x45 DIN 933 8.8 ZN	VITE TE M4x45 DIN 933 8.8 ZN	€ 0,35

Pos.	Article Code	Description		Price
139	114400000	SPECIAL WASHER 4x22x2 ZN	RONDELLA 4x22x2 ZN SPECIALE	€ 1,08
140	114500000	GEAR BLOCKING TAPERED NUT	DADO CONICO BLOCCA INGRANAGGIO	€ 2,61
141	115100000	SPECIAL WASHER 5x22x2 ZN	RONDELLA 5x22x2 ZN SPECIALE	€ 1,08
142	113700000	CYLINDRICAL PLUG. 6x33 DIN7	SPINA CIL. 6x33 DIN7	€ 0,78
143	110901000	SOCKET SCREW M6x16 ZN DIN 912 ZN	VITE TCEI M6x16 ZN DIN 912 ZN	€ 0,36
144	031950000	BEARING 6005 2RS INOX (FOR MAIN SIDE ELEMENT)	CUSCINETTO 6005 2RS INOX x FIANC. PRINC.	€ 25,98
145	043500000	PLASTIC BUSHING	BOCCOLA PLAST. CUSCINETTO INOX	€ 2,27
146	043600000	BEARING PLASTIC GASKET 46,8x41x1	GUARNIZIONE PER CUSCINETTO 46,8x41x1	€ 2,59
147	057002000	GEAR W/ BEARING. SP411 PA6	INGRAN. C/CUSC. SP411 PA6	€ 13,88
150	112000000	WASHER PS 15x22x0,3 DIN 988	RONDELLA PS 15x22x0,3 DIN 988	€ 2,95
152	061000000	SET OF GEARS 340/350/420/550/620	GR. INGRANAGGI 340/350/420/550/620	€ 154,04
153	230140000	THURMOGREASE HDC 2 1KG	THURMOGREASE HDC 2 1KG	€ 50,50
154	031902000	BEARING M.CYL. W/PLAST.BUSH	ASSIEME CUSCINETTO E RONDELLA DI PLASTICA	€ 27,96

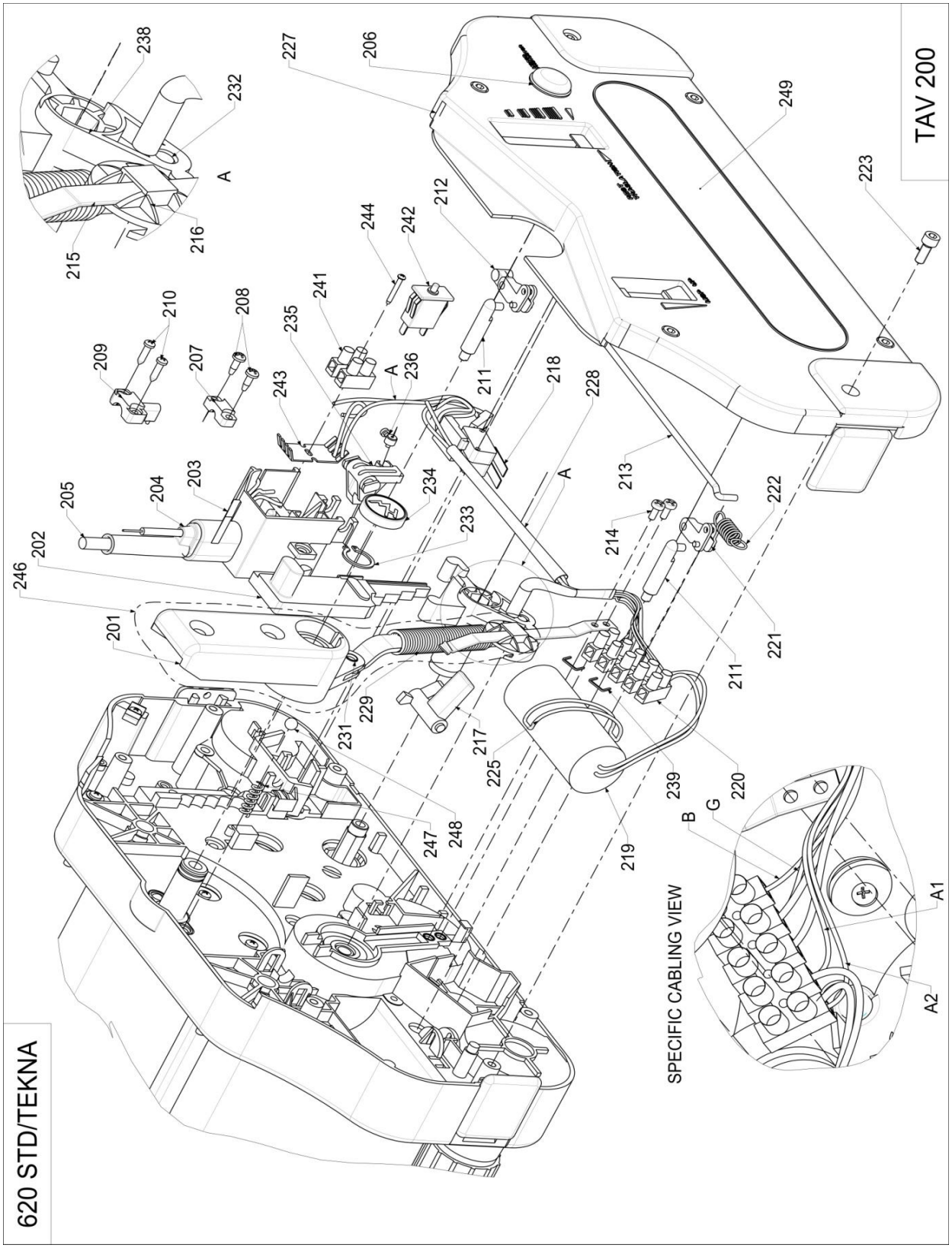
620 STD/TEKNA
TAV 200
SPECIFIC CABLING VIEW
A
B
G
A1
A2
201
202
203
204
205
206
207
208
209
210
211
212
213
214
215
216
217
218
219
220
221
222
223
225
227
228
229
231
232
233
234
235
236
238
239
241
242
243
244
246
247
248
249

Pos.	Article Code	Description		Price
201	180310000	HANDLE SUPPORT 340/420/620	SUPPORTO MANICO 340/420/620	€ 29,73
202	140800000	ADJUSTMENT SLIDER	CURSORE DI REGOLAZIONE	€ 3,78
203	141900000	FAIRLEAD SUPPORT	SUPPORTO PASSACAVO	€ 8,96
204	040900000	FAIRLEAD	PASSACAVO	€ 2,66
205	080507000	EU SCHUKO L=12,00m	CAVO EU SCHUKO L=12,00m NERO	€ 28,26
206	080900000	FRONT COVER RUBBER SEAL. BLACK	CALOTTA x CARTER EST. NERA	€ 3,11
207	142000000	FAIRLEAD RELIEF	FERMA PRESSACAVO	€ 2,17
208	110200000	PH. BUTTON HEAD SCREW 4.2X13 ISO 7045 ZN	VITE TBTC 4.2X13 ISO 7045 ZN	€ 0,18
209	142100000	CABLE RELIEF	FERMACAVO	€ 1,05
210	110300000	PH. BUTTON HEAD SCREW 4.2X16 ISO 7045 ZN	VITE TBTC 4.2X16 ISO 7045 ZN AUTOFILETTANTE	€ 0,19
211	140266777	PLASTIC PISTON W/ BRASS PIN (ASSEMBLED)	PISTONE CON INSERTO	€ 6,51
212	140000000	PLASTIC PISTON LONG LEVER	LEVETTA COMANDO PISTONE LUNGA	€ 1,99
213	210601000	PISTON LEVER TIE ROD	TIRANTE PER LEVE LIQUIDO	€ 5,25
214	112300000	SELF TAPPING SCREW TCB M4X10 UNI 8112 ZN	VITE AUTOFORMANTE TCB M4X10 UNI 8112 ZN	€ 0,15
215	200401000	CLUTCH LEAF SPRING	MOLLA A BALESTRA	€ 7,54
216	140400000	CLUTCH FORK	FORCELLA	€ 1,95
217	140500000	CLUTCH TRIGGER LEVER	LEVETTA DI INNESTO	€ 1,95
218	081300000	MICROSWITCH SB XGA42-86-J42Z1	MICROSWITCH SB XGA42-86-J42Z1	€ 8,99
219	080200000	CAPACITOR 25µF 450V Ø40x94 CABLES L=165mm	CONDENSATORE 25µF 450V Ø40x94 CAVI L=165	€ 17,91
220	081930000	5 PIN TERMINAL BLOCK 6mm²	MORSETTIERA 5 POLI 6mm²	€ 5,11
221	140100000	PLASTIC PISTON SHORT LEVER	LEVETTA COMANDO PISTONE CORTA	€ 1,91
222	100400000	TRACTION SPRING. TR 1,3x10x13,5	MOLLA A TRAZ. C/OCCH. ZINC. TR 1,3x10x13,5	€ 2,87
223	110901000	SOCKET SCREW M6x16 ZN DIN 912 ZN	VITE TCEI M6x16 ZN DIN 912 ZN	€ 0,36
225	040800000	O-RING 3156 ø39,34 SECTION Ø2,62 NBR	O-RING 3156 ø39,34 FILO=2,62 NBR	€ 0,63
227	130260000	ANON. EXT. CRANKCASE W/ SCREWS. 420-620	CARTER EST. ANONIMO SER. ASS. 340-420-620	€ 40,07
228	080801000	TEKNA HILT CONNECTION WIRES KIT	CONDUTTORI DI COLLEG. ASS. TEKNA	€ 19,77
228	082466778	OPC HILT CONNECTION WIRES KIT	CONDUTTORI COLLEG. ASS. OPC	€ 9,16
229	100300000	ASSEMBLED HANDLE SUPPORT SPRING	MOLLA x CIL. DI SPINTA MONTATA	€ 10,64
231	011600000	HANDLE SUPPORT HOLDING PIN	PERNO DEL SUPPORTO MANICO	€ 2,64
232	113800000	GALVANIZED KNURLED CYL. PLUG 8x22	SPINA GODRONATA 8x22 ZINCATA	€ 1,56

Pos.	Article Code	Description		Price
233	113300000	SEEGER RING Ø18 UNI7435	ANELLO SEEGER Ø18 UNI7435	€ 0,57
234	140610000	BLACK CAP HW FOR HANDLE SUPPORT	TAPPO HW NERO X SUPPORTO MANICO	€ 1,95
235	142200000	STEEL CABLE LEVER	LEVETTA ARTICOLAZIONE CAVO	€ 1,45
236	221701000	GRUB SCREW KIT	GR. GRANO X GUAINA/CAVO	€ 1,45
238	140300000	WHEEL RISING MECHANISM	ATTIVATORE SOLLEVAMENTO RUOTE	€ 7,62
239	081902000	CABLE CLAMP 6mm²	PONTICELLO x MORSETTIERA 6mm²	€ 0,39
241	082000000	2 PIN TERMINAL BLOCK 6mm²	MORSETTIERA 2 POLI 6mm²	€ 2,37
242	081200000	MOTOR PROTECTION SWITCH 12A	SALVAMOTORE 12A	€ 25,98
243	081500000	UNDER CABLE CLAMP PLASTIC	SOTTO MORSETTIERA PA 2 POLI	€ 0,55
244	111100000	SELF TAP. PH SCREW. TC+ 2,9x22 ZN DIN 7981-C	VITE AUTOF. TC+ 2,9x22 ZN DIN 7981-C	€ 0,16
246	180320000	HANDLE SUPPORT KIT.	SUPPORTO ARTIC. MANICO ASS.	€ 85,05
247	100200000	LATCH SYSTEM SPRING	MOLLA x SCROCCO MANICO	€ 1,99
248	031200000	Ø5/16”STEEL BALL	SFERA ACCIAIO Ø=5/16"	€ 0,34
249	241700000	DUPLEX LABEL 293x54	ETICHETTA RESINATA "DUPLEX" 293x54	€ 6,40

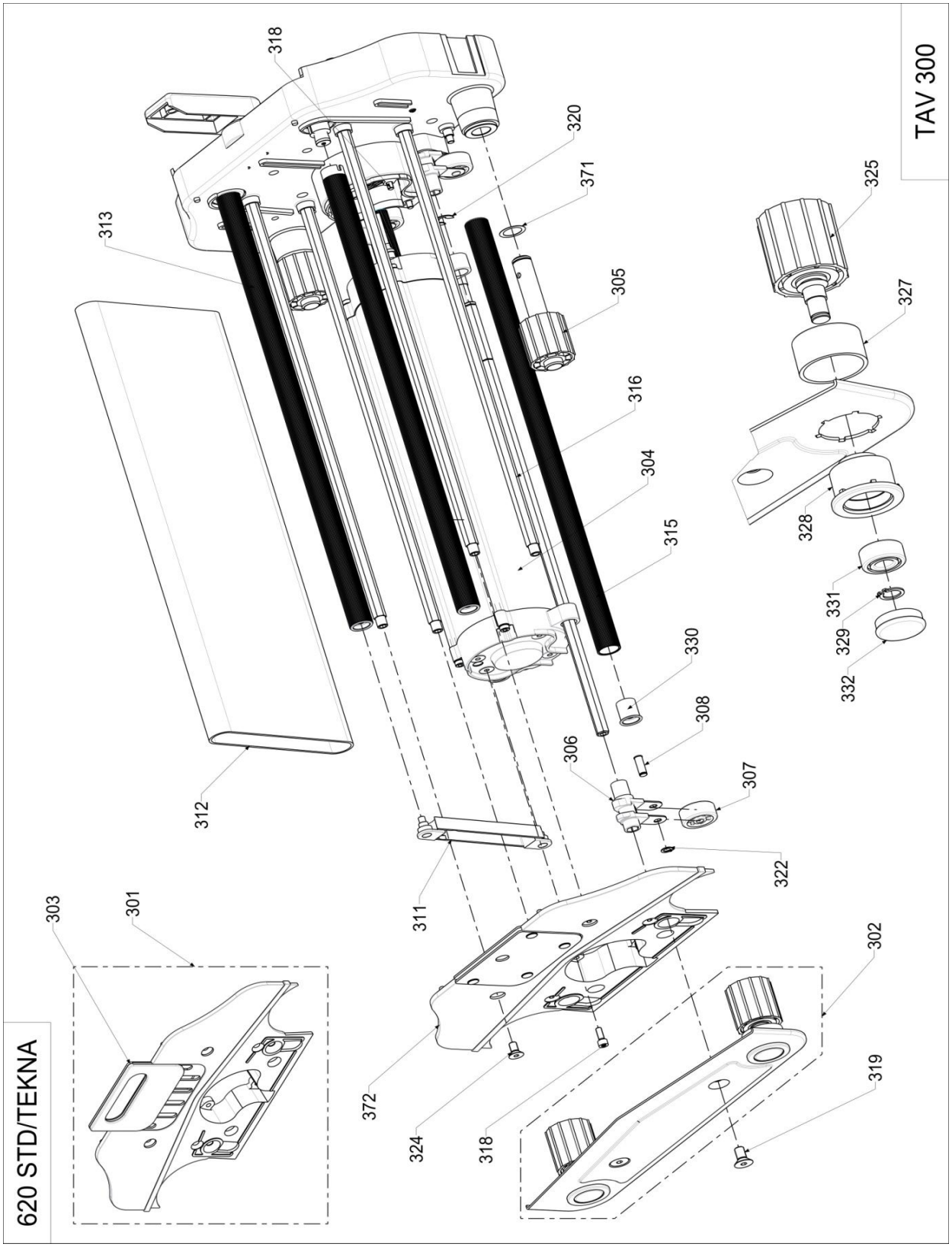
TAV 300
620 STD/TEKNA
318
320
371
313
305
316
304
315
330
308
306
307
322
312
311
325
327
328
331
329
332
303
301
302
319
372
324
318

Pos.	Article Code	Description		Price
301	180210000	POST. SIDE ELEMENT W/HANDLE	FIANCATA POST. C/MANIGLIA	€ 77,91
302	200202000	ASSEMBLED INOX COVER W/ BRUSH SUPPORT	CARTER INOX ASSIEMATO	€ 125,49
303	S42007001_00	HANDLE KIT	KIT MANIGLIA	€ 6,82
304	090903000	MOTOR 620 230V 50Hz	MOTORE 620 230V 50Hz	€ 456,11
305	150701000	MAIN SIDE BRUSH SUPPORT WHITE	SUPPORTO SPAZZOLA FIANCATA PRINC. BIANCO	€ 19,07
305	150802420	MAIN SIDE BRUSH SUPPORT BLACK	SUPPORTO SPAZZOLA FIANCATA PRINC. NERO	€ 19,07
306	160501000	PLASTIC MOLDED WHEEL SUPPORT	SUPPORTO RUOTA STAMPATO	€ 6,84
307	160600000	NYLON WHEEL	RUOTA IN NYLON	€ 1,67
308	012800000	STAINL.STEEL WHEEL SHAFT	ALBERO INOX PER RUOTE	€ 3,62
311	180902000	PAINTED CYLINDERS SUPPORT.	SUPPORTO CILINDRI	€ 25,98
312	042100000	CONVEYOR NBR BELT 620/550 SP=2,5 NBR	CONVOGLIATORE 620/550 SP=2,5 NBR	€ 98,36
313	014301000	ENGINE DRIVEN ASS. CYL. KIT 620-550	CILINDRO MOTORE 620-550 ASS.	€ 47,90
315	014101000	IDLE ASSEMBLED CYLINDER KIT 620-550	CILINDRO FOLLE 620-550 ASS.	€ 51,26
316	012301000	CONNECTING SHAFT. 620-550	ALBERO COLLEG. FIANC. 620-550	€ 10,18
318	110901000	SOCKET SCREW M6x16 ZN DIN 912 ZN	VITE TCEI M6x16 ZN DIN 912 ZN	€ 0,36
319	111501000	SCREW TSPEI M10x20 A2 DIN 7991 A2	VITE TSPEI M10x20 A2 DIN 7991 A2	€ 1,83
320	113500000	BENZING RING Ø12	ANELLO BENZING Ø12	€ 0,88
322	110700000	BENZING RING Ø8 (WHEELS)	ANELLO BENZING Ø8 (RUOTE)	€ 1,46
324	111201000	SCREW TSPEI M8x16 ZN DIN 7991	VITE TSPEI M8x16 ZN DIN 7991	€ 0,79
325	150802000	BRUSH SUPPORT ST. STEEL PLATE SIDE	SUPPORTO SPAZZOLA LATO INOX	€ 13,24
327	181101000	BRUSH SUPPORT COVER	COPERCHIO PORTASPAZZOLA	€ 6,74
328	181201000	BRUSH SUPPORT BASE	BASE SUPPORTO PORTASPAZZOLA	€ 6,74
329	800000214	SEEGER RING Ø12 INOX	ANELLO SEEGER Ø12 INOX	€ 0,24
330	013901000	ASSEMBLED BUSHING FOR CYL.	BOCCOLA x CILINDRI MONTATA	€ 10,21
331	031455000	BEARING 63001 2RS (BRUSH SUPPORT)	CUSCINETTO 63001 2RS x SUPP. SPAZZOLA	€ 9,78
332	151000000	BRUSH SUPPORT COVER CAP	TAPPO x SUPPORTO SPAZZOLE	€ 0,96
371	112733000	WASHER PS 20X28X0,3 DIN988	RONDELLA PS 20X28X0,3 DIN988	€ 0,57
372	180230000	BACK SIDE ELEMENT (TEKNA)	FIANCATA POST. TEKNA-ESC. BASE	€ 152,99

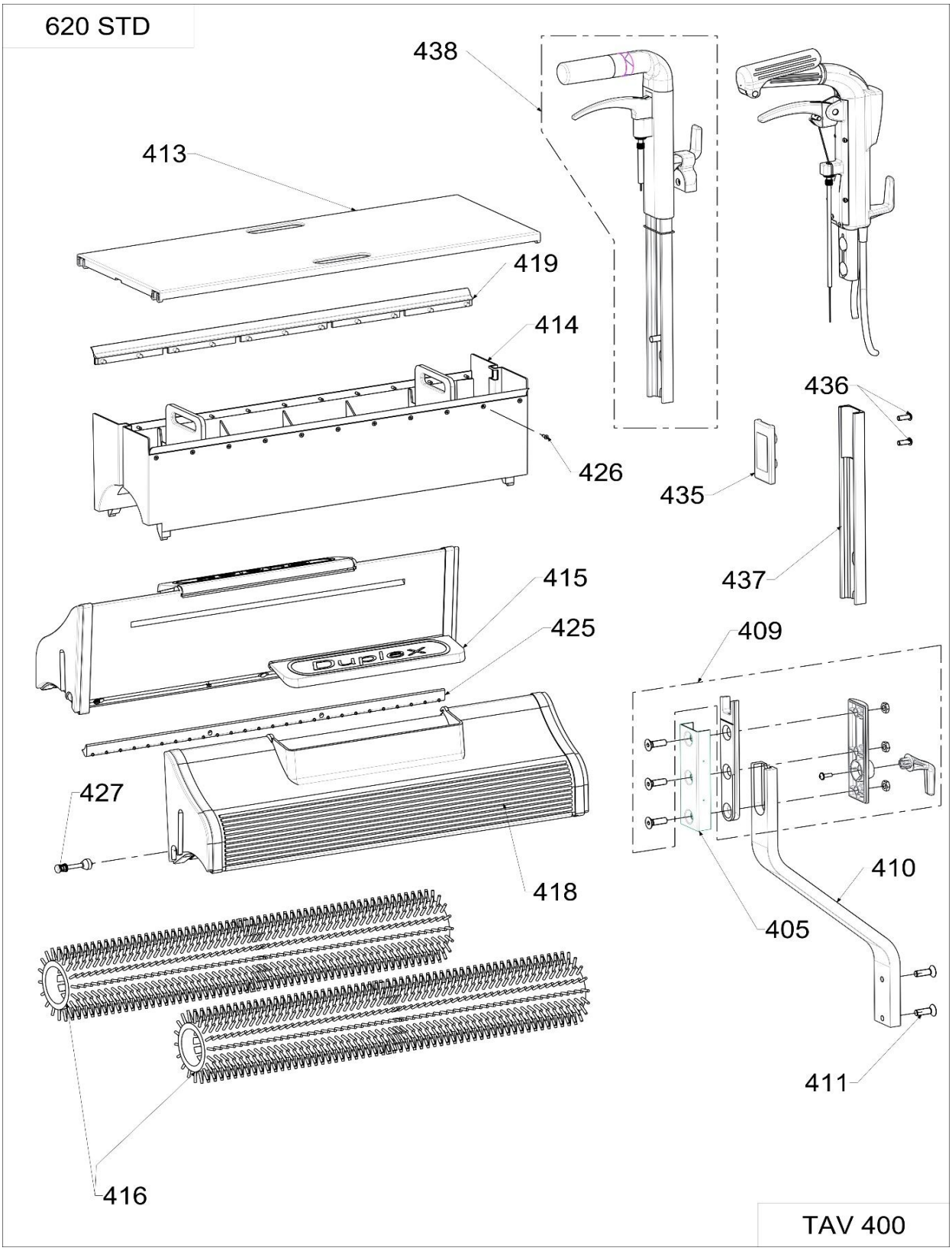
620 STD
438
413
419
414
426
436
435
437
415
425
409
427
418
410
405
411
416
TAV 400

Pos.	Article Code	Description		Price
405	C42020001_00	CASING SLEEVE	CUFFIA INOX	€ 6,62
406	111201000	SCREW TSPEI M8x16 ZN DIN 7991	VITE TSPEI M8x16 ZN DIN 7991	€ 0,79
407	020200000	CASING SLEEVE BUSH	BOCCOLA CUFFIA	€ 2,03
409	G42020001_00	REVOLVING CABLE HOLDER KIT	GR. BITTA REGGICAVO GIREVOLE	€ 13,24
410	210502000	550/620 HANDLE ELBOW W/INSERT (TEKNA)	GOMITO 550/620 C/INSERTO	€ 53,90
411	111301000	SCREW TSPEI M8x25 ZN DIN 7991	VITE TSPEI M8x25 DIN7991	€ 0,73
413	170400000	620 RECOVERY TANK COVER	COPERCHIO SERB. RECUP. 620	€ 36,33
414	122401000	620 ASSEMBLED RECOVERY TANK.	SERBATOIO RECUP. 620 ASS.	€ 86,21
415	170100000	WATER TANK COVER 340/350/420	COPERCHIO SERB. ACQUA 340/350/420	€ 6,98
416	190201000	620 TYNEX BRUSHES	SPAZZOLA 620 SET. TYNEX	€ 199,56
416	190202000	620 YELLOW BRUSHES PP 0,12	SPAZZOLA 620 SET. GIALLE PP 0,12	€ 111,56
416	190203000	620 BLACK BRUSHES PP 0,25	SPAZZOLA 620 SET. NERE PP 0,25	€ 111,56
416	190204000	620 GREY BRUSHES PP 0,18	SPAZZOLA 620 SET. GRIGIE PP 0,18	€ 111,56
416	190208000	620 BLACK BRUSHES PP 0,50	SPAZZOLA 620 SET. NERE PP 0,50	€ 111,56
418	G62012011_00	620 ASSEMBLED GREY 7024 WATER TANK	SERBATOIO 620 GRIGIO 7024 ASS.	€ 100,27
419	040340000	620-550 TRIMMER W/SCREW	RASATORE 620-550 CON VITI	€ 7,48
425	120801000	620 DRIP CHANNEL W/ SCREW	SET GOCCIOLATOIO 620	€ 5,10
426	110800000	SELF TAPPING SCREW TSP CC .2,9X9,5 ISO 7050	VITE AUTOF. TSP+ 2,9x9,5 A2 ISO 7050	€ 0,22
427	011410000	WATER TANK PLASTIC VALVE KIT	SET. VALVOLA E ACCESSORI PLASTICA	€ 4,96
435	182200000	IMP/OPC LOCKING PLATE	PIASTRA FISSAGGIO IMP/OPC	€ 7,46
436	800000217	SCREW TBCE M6x16 ZN BLACK UNI ISO 7380	VITE TBCE M6x16 ZN NERA UNI 7380	€ 0,34
437	450550000	OPC INSERT ROD	INSERTO IMPUGNATURA OPC	€ 14,89
438	A42005002_00	STD ASSEMBLED HILT	IMPUGNATURA STD ASSIEMATA	€ 158,85

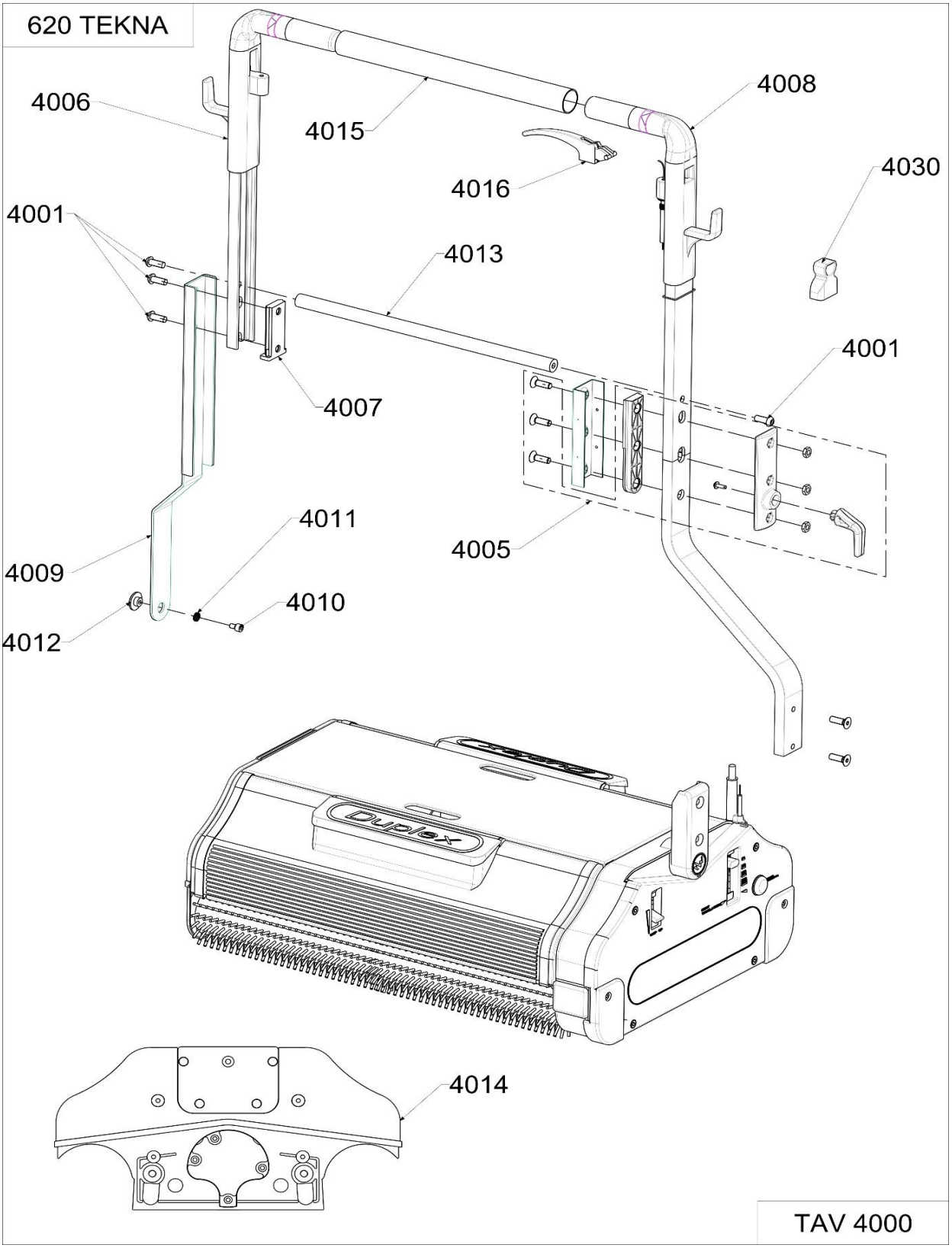
620 TEKNA
4006
4015
4008
4016
4030
4001
4013
4001
4007
4011
4005
4009
4010
4012
4014
TAV 4000

Pos.	Article Code	Description		Price
4001	116100000	TCBEI M8x20 A2 ISO 7380 SCREW	VITE TCBEI M8x20 A2 ISO 7380	€ 0,66
4005	243900620	293x54 "CLEANCRAFT DWM-K 620" LABEL	ETICH. RES. "CLEANCRAFT DWM-K 620" 293x54	€ 6,40
4006	130650000	BLACK HILT TEKNA SERIES SHORTENED	IMPUGNATURA STD C/INSERTO ACCORCIATA	€ 46,33
4007	141401000	ELBOW INSERT	INSERTO DEL GOMITO	€ 4,44
4008	130609000	STD BLACK HILT	IMPUGNATURA STD C/INSERTO	€ 49,31
4009	205855000	STAINLESS STEEL ELBOW 620/550	GOMITO INOX 620/550	€ 100,25
4010	115800000	SCREW TCEI M6x10 ZN DIN 912	VITE TCEI M6x10 ZN DIN 912	€ 0,42
4011	114710000	LOCK WASHER. M6 UNI 8842 A ZN	RONDELLA DENT. M6 UNI 8842 A ZN	€ 0,16
4012	015800000	TEKNA SPECIFIC HANDLE NUT H=11	DADO ALTO H. 11 TEKNA	€ 9,99
4013	203611000	ANODIZED HANDLE SPACER 620-550	DISTANZIALE 620-550 ANOD.	€ 10,45
4014	180230000	BACK SIDE ELEMENT (TEKNA)	FIANCATA POST. TEKNA-ESC. BASE	€ 152,99
4015	203511000	STAINLESS STEEL HILT PIPE 550/620	TUBO INOX MANICO 620-550 LUCIDO	€ 23,08
4016	130810000	FLUID RELEASE LEVER	LEVA NERA MANIGLIA	€ 4,50
4030	041601000	CABLE RETAINER	SOSPENSIONE PER CAVO	€ 4,74

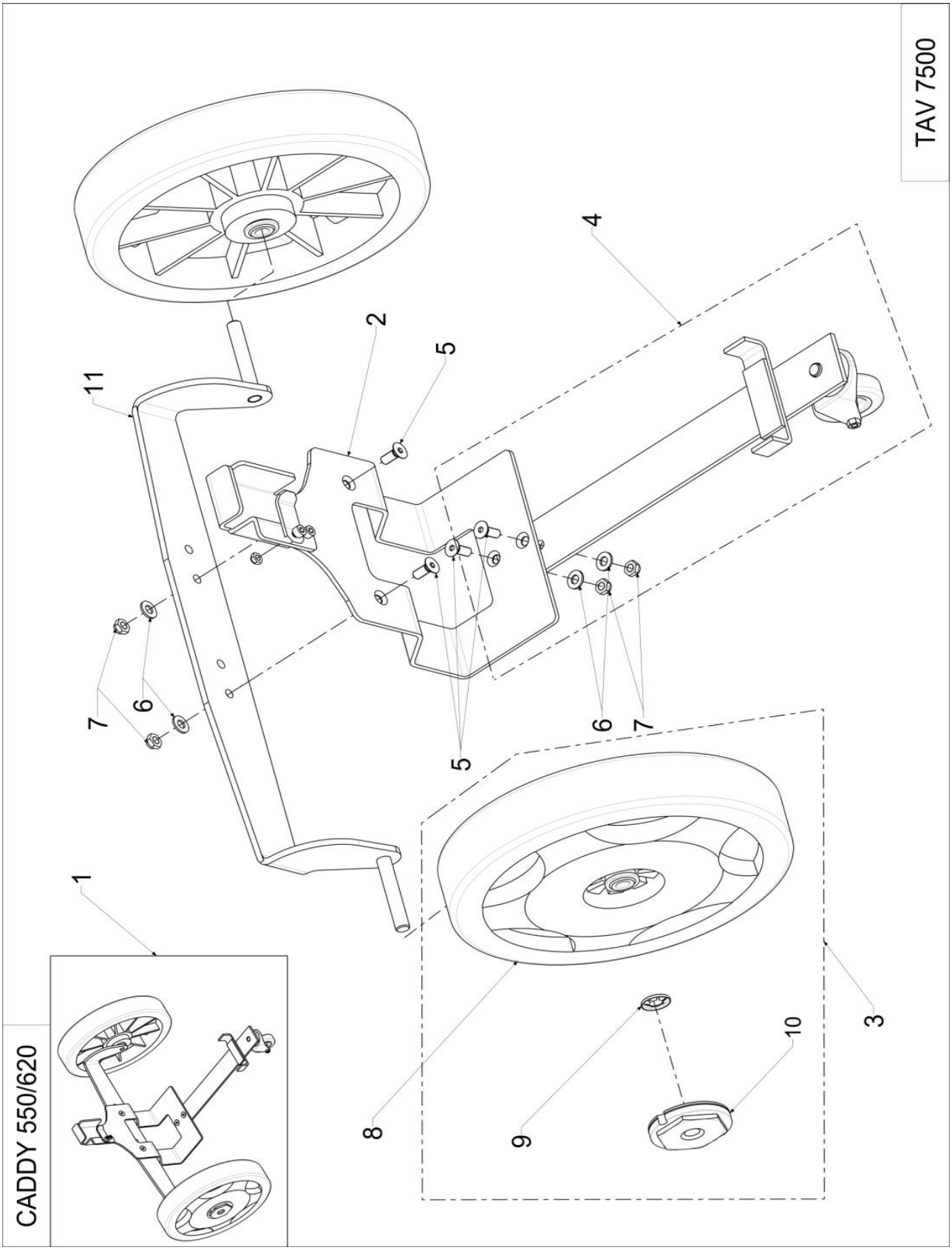
TAV 7500
CADDY 550/620
1
2
3
4
5
6
7
8
9
10
11

Pos.	Article Code	Description		Price
001	620495000	550/620 CADDY	CADDY 550/620	€ 336,28
002	456601000	CADDY UPPER FRAME	TELAIO SUPERIORE CADDY	€ 74,66
003	452002000	CADDY WHEEL KIT	GR. RUOTA CADDY	€ 16,55
004	452001288	550/620 CADDY LOWER FRAME KIT	TELAIO INF. ESC 550/620	€ 70,84
005	111700000	SCREW TSPEI M8X20	VITE TSPEI M8X20	€ 0,19
006	RONPI81615Z6592	WASHER 8,4X16X1,5	RONDELLA 8,4x16x1,5	€ 0,20
007	112100000	SELF LOCKING NUT M8	DADO M8 AUTOBLOCCANTE	€ 0,15
008	452077000	350/550/620 CADDY WHEEL	RUOTA CADDY 350/550/620	€ 13,90
009	452003000	Ø12 WHEEL CLAMPING RING	ANELLO ARRESTO Ø12	€ 0,69
010	452004000	Ø26 WHEEL CAP	TAPPO FORO Ø26	€ 2,74
011	456611000	CADDY BRACKET	STAFFA CADDY	€ 93,94