Papierkörbe

feuersicher, in Edelstahl - Ausführung

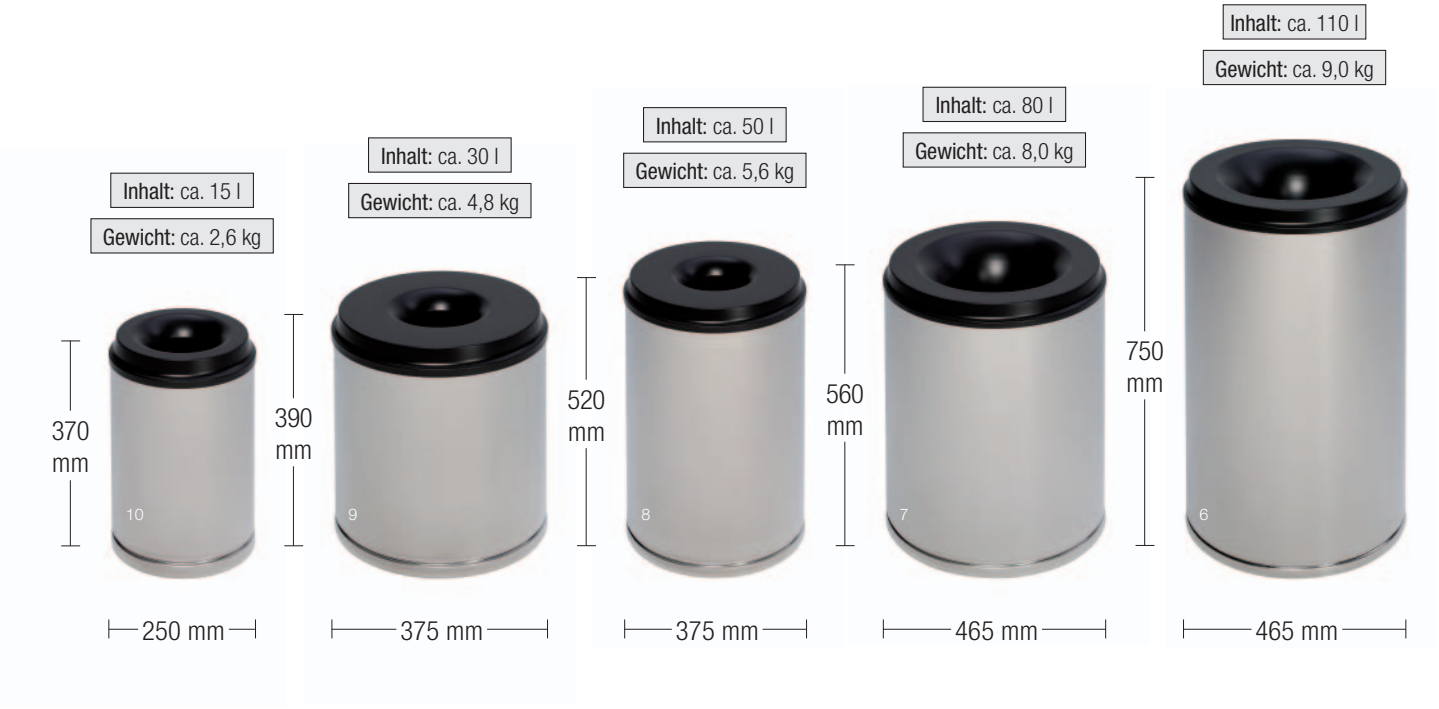

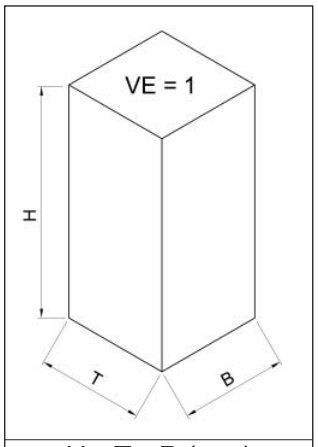

H x T x B (mm)
15-l = 375 x 255 x 260
30-l = 465 x 430 x 430
50-l = 605 x 430 x 430
80-l = 605 x 515 x 515
110-l = 780 x 510 x 525

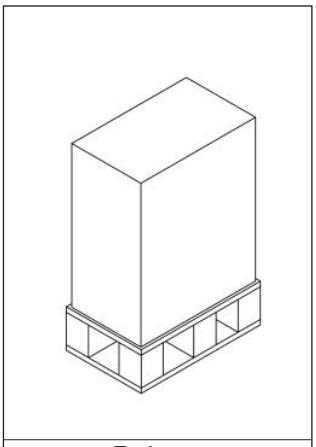

Palette
VE = 60
VE = 24
VE = 18
VE = 8
VE = 8